MPD/NICA TPC status (28.10.2020)

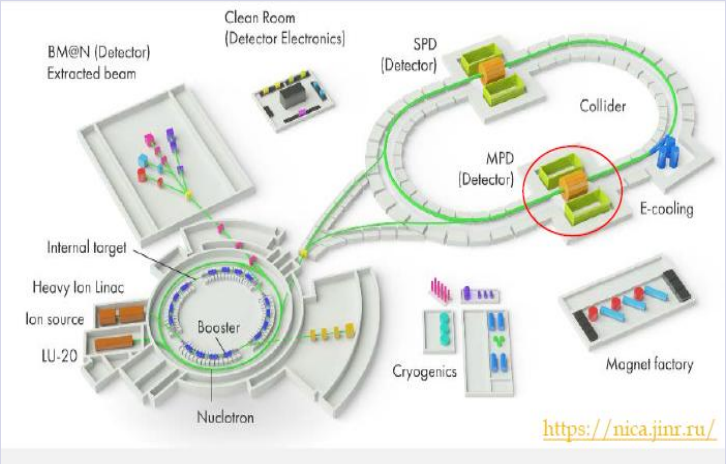

- TPC parameters
- ROC chambers
- TPC assembly
- front end electronics
- gas, cooling, laser and SC systems
- cabling and piping
- integration TPC to MPD
- time schedule

Presented by Sergey Movchan

JINR team: 24 persons
Belarus: 6 persons
UW Poland: 4-6 persons

MPD TPC parameters

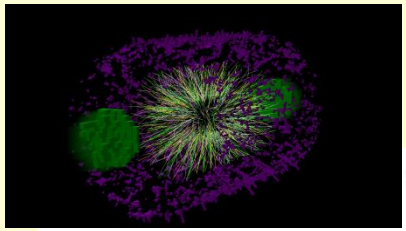

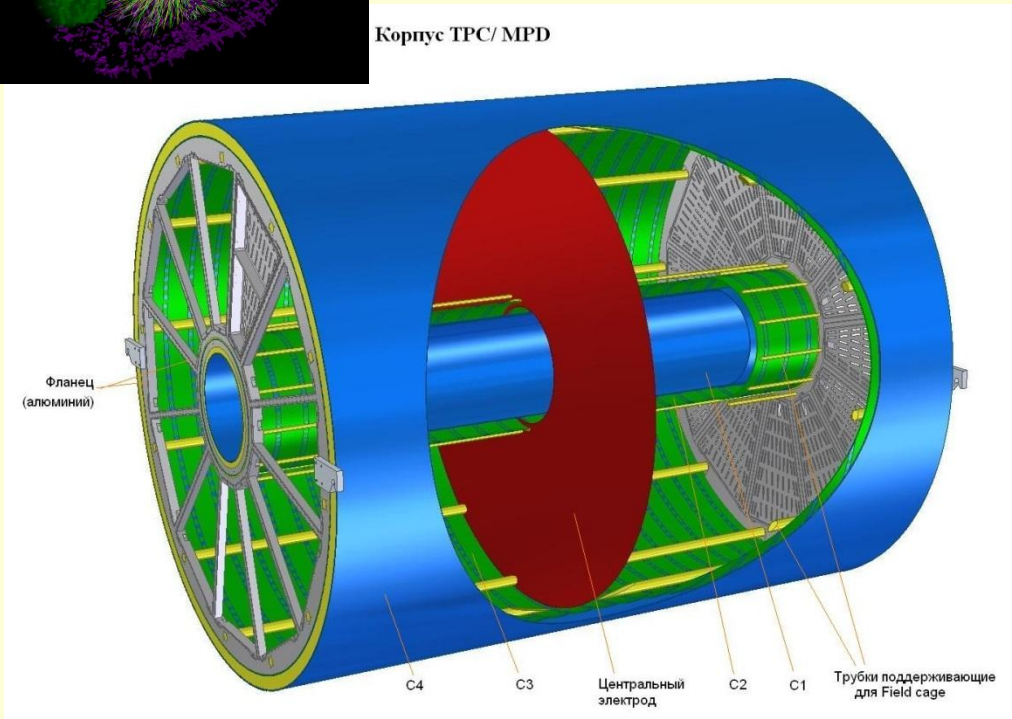

TPC TDR – http://mpd.jinr.ru/wp-content/uploads/2019/01/TpcTdr-v07.pdf

Item	Dimension
Length of the TPC	340cm
Outer radius of vessel	140cm
Inner radius of vessel	27 cm
Outer radius of the drift volume	133cm
Inner radius of the drift volume	34cm
Length of the drift volume	170cm (of each half)
HV electrode	Membrane at the center of the TPC
Electric field strength	~140V/cm;
Magnetic field strength	0.5 Tesla
Drift gas	90% Ar+10% Methane, Atmospheric pres. + 2 mbar
Gas amplification factor	~ 10^4
Drift velocity	5.45 cm/μs;
Drift time	< 30μs;
Temperature stability	< 0.5°C
Number of readout chambers	24 (12 per each end-plate)
Segmentation in φ	30°
Pad size	5x12mm^2 and 5x18mm^2
Number of pads	95232
Pad raw numbers	53
Pad numbers after zero suppression	< 10%
Maximal event rate	< 7 kHz (Lum. 10^{27})
Electronics shaping time	~180 ns (FWHM)
Signal-to-noise ratio	30:1
Signal dynamical range	10 bits
Sampling rate	10 MHz
Sampling depth	310 time buckets

ROC chamber: pad plane

2 parts

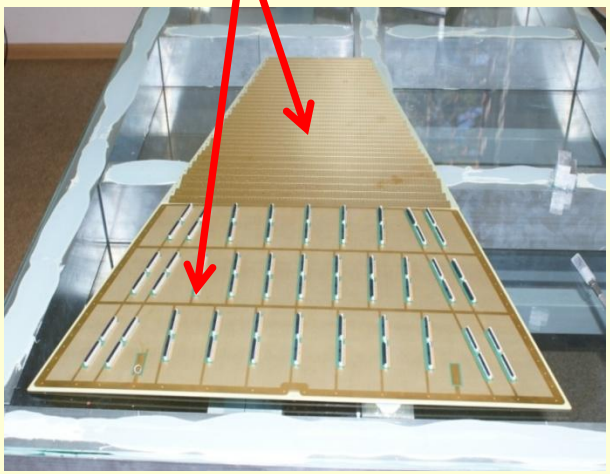

Connectivity test

Last 8 serial pad planes: connectors soldering - in progress

ROC chambers status

26 pc ROC frames - in stock

ROC cleaning procedure

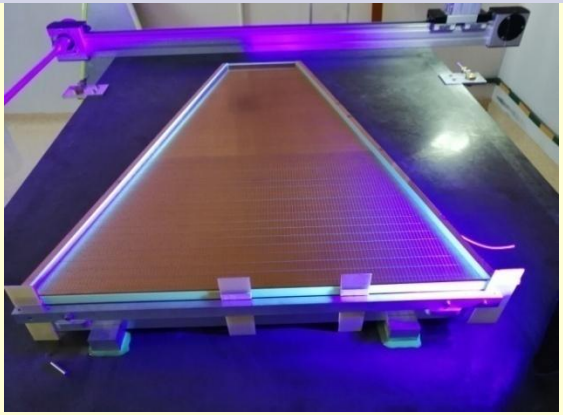

Wire pitch check set up

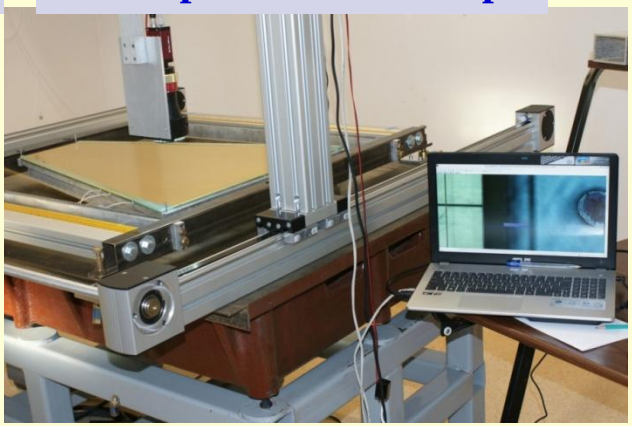

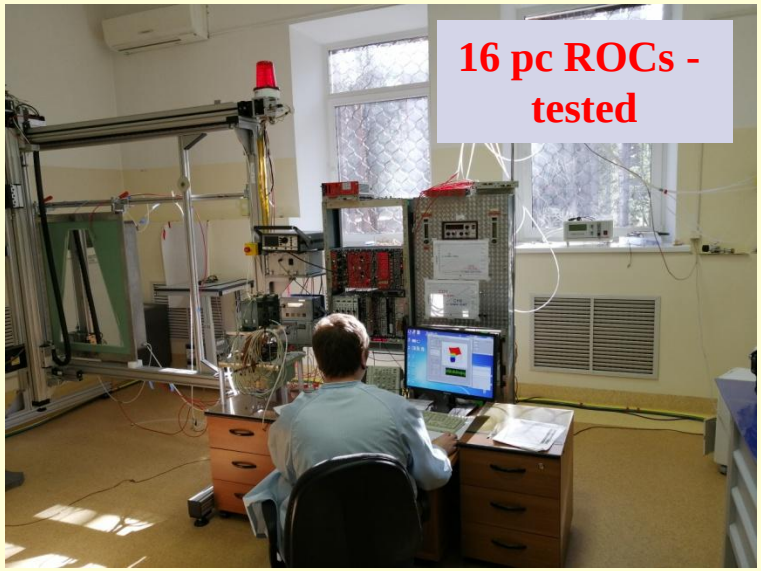

16 pc ROCs - tested

2 pc – tests in progress

ROC gate system (UW Poland)

New power supplies

Power supply

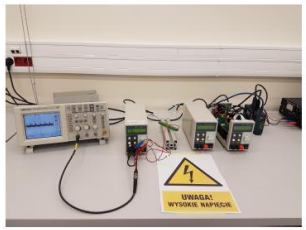

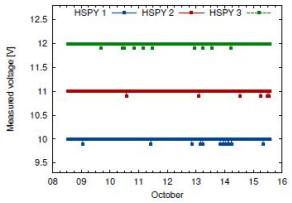

- Left-hand side: switching power supplies, HSPY 200V, 3A (new ones)
  - → communication via RS232/ethernet established
  - → long-term stability tests ongoing
- Right-hand side: the very first results of the stability measurements
  - → small fluctuations observed, but in general they work stable

Impedance measurements

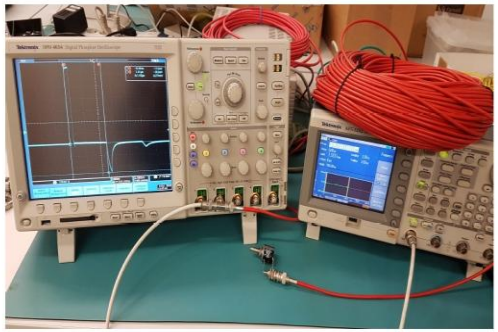

Z=44÷49 Ohm

Attenuation measurements

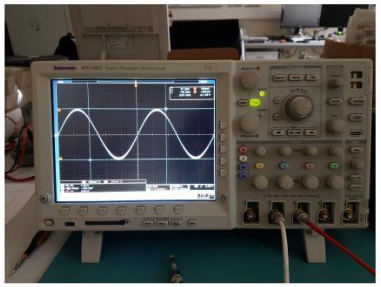

Generator Specification:
- Tektronix AFG 3252
- Bandwidth: 240 MHz
- Sampling rate: 2 GS/s

Oscilloscope specification:
- Tektronix DPO 4054
- Bandwidth: 500 MHz
- Sampling rate: 2.5 GS/s

- Generated signal: sine, 1 V_{pp}, 10 Hz - 200 MHz
- Measurement of *generated signal* amplitude, A_0, delivered via short cable (50 cm, 50 Ω)
- Measurement of *attenuated signal* amplitude, A, delivered via long cable (100 m, ~48 Ω)

Attenuation results - zoom to range of interest

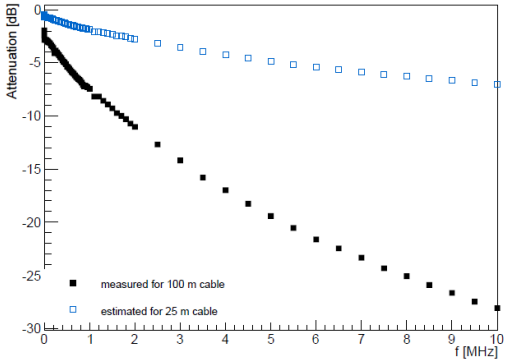

- Blue point present expected attenuation for the cable with length of 25 m

Gating-grid modules borrowed form NA61/SHINE and ALICE

- Left hand side: pulsers and communication/control units borrowed form NA61/SHINE and ALICE experiments at CERN
  - → similar design, standard and connections scheme will be used for MPD gating-grid pulsers
  - → elements to start-up NA61/SHINE pulsers are collected. Operation test are foreseen in close future.
- Right-hand side: linear power supplies, Zentro 60V or 75V, 1A, borrowed from NA61/SHINE at CERN
  - → to be used for starting gating-grid pulsers from NA61/SHINE
  - → they quality stands for point of reference for new power supplies

Set of modules ready for tests (like reference)

Measurements and tests started

TPC assembly (Bld.217) – common view

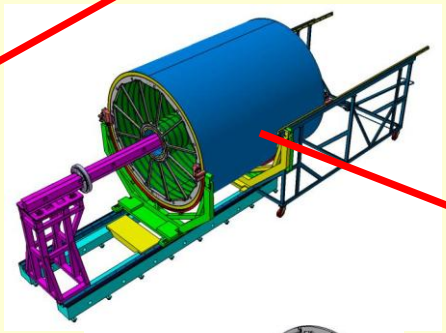

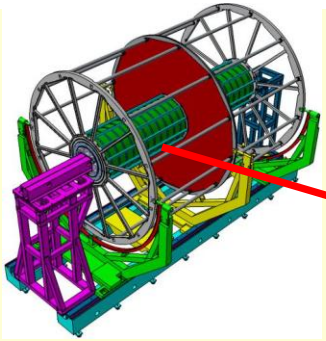

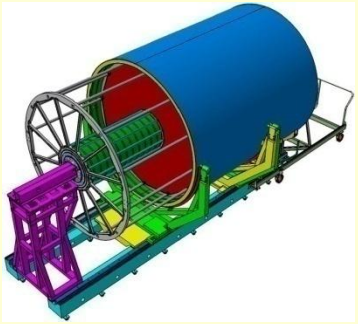

C1-C2 and C3-C4 - glued
Gas leak test – NO leak

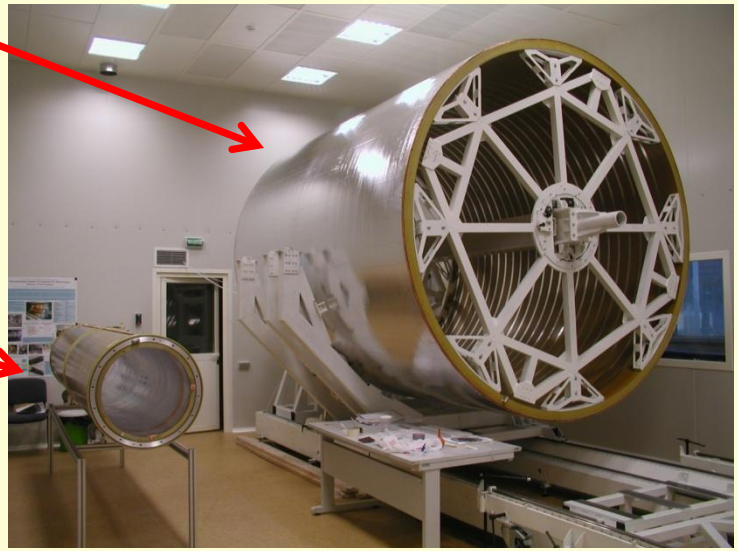

TPC electronics requirements

Data rates:

- trigger mode – 20 GByte/sec *(N=1000 tracks)*

- continuous readout mode - 300 GByte/sec

Particle fluence *for R=35 cm & 10 years (October 2019 update)*:

neutrons + protons – 1011 p/cm2 per year**

e- & e+ - 2x1010 p/cm2 per year**

ions - 10 5 p/cm2 per year**

Dose:

Expected dose - 2 kRad per 10 years

SAMPA v3/v4 tested at:
*proton fluence - up to N=10**12 per cm2*
*ion fluence - up to N=10** 7 per cm2 & LET=(3-125) MeV cm2/mg*
T chip=(45-85) degree =>
SEL =1x10-7 cm2 for LET=16 MeV cm2/mg

TID and SEL - ok!

FPGA Cyclon V (technology -130 nm): 28 nm):
TID – up to 100 kRad, SEL < 0.5 sec for LET=26.6 MeV cm2/mg

TID – ok!, SEL – no so good

TPC electronics: block diagram of one chamber readout

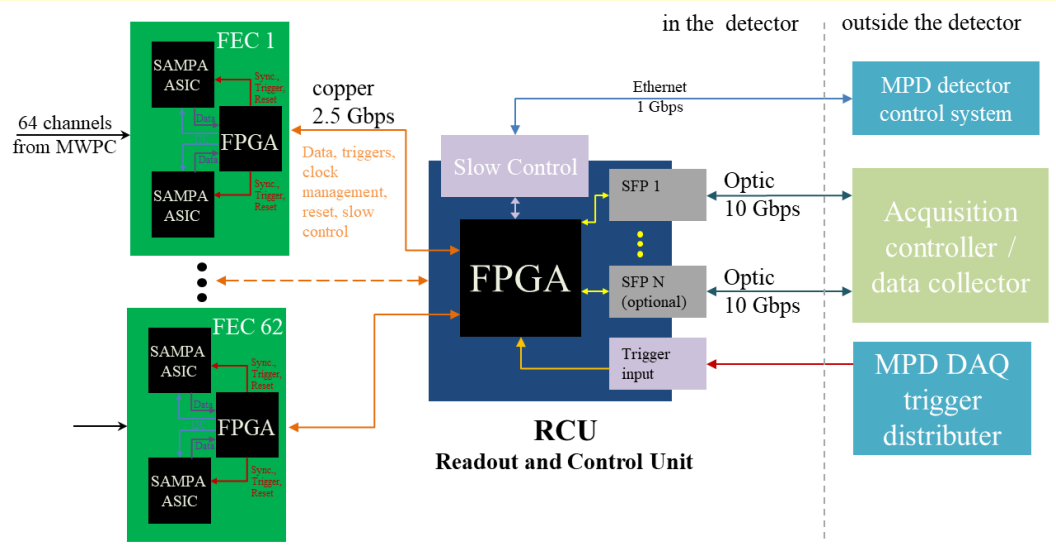

RCU and data concentrator based on commercial kits

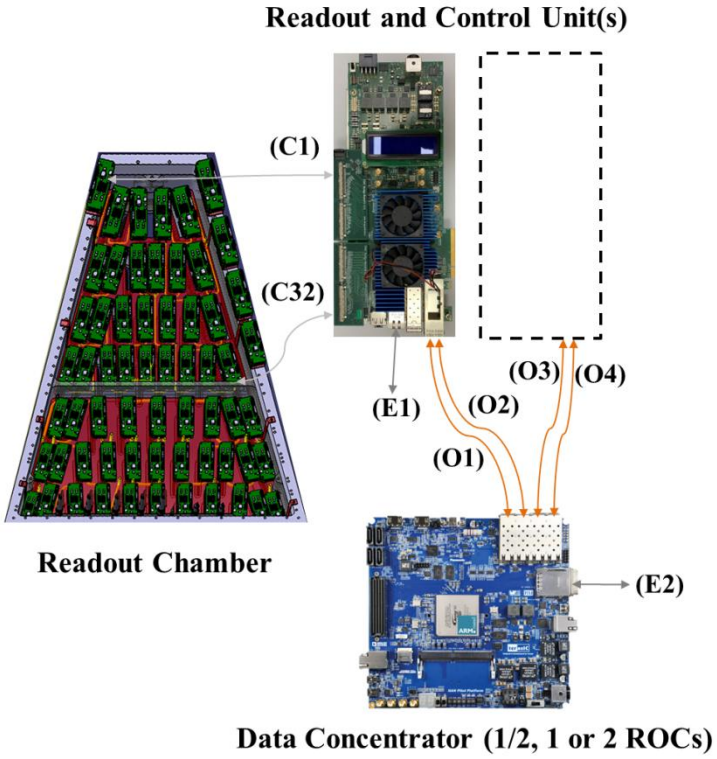

SAMPA chip

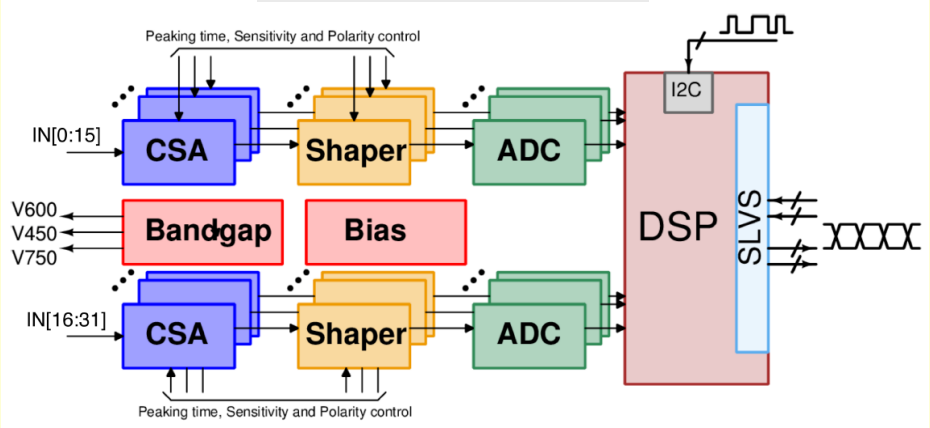

TPC electronics: FE cards

Top view (service side)

- The total number of registration channels: 64
- Input signal dynam. range: 100 fC
- ADC resolution: 10 bit
- ENC: less than 1000e$^-$
- SAMPA chips configured and controlled via FPGA
- Readout serial interface: up to 2.5 Gbps

➢*Double-board FEC provides opportunities for possible upgrade of the card readout.*
➢*Transfer of data and trigger signals was realized with the same high-speed serial interface.*
➢*16 values of currents, voltages and board temperatures are controlled with ADC.*
➢*External circuit and embedded protection functionality against SEU are provided.*
➢*Remote system update for FEC firmware was provided.*

Bottom view (ROC side)

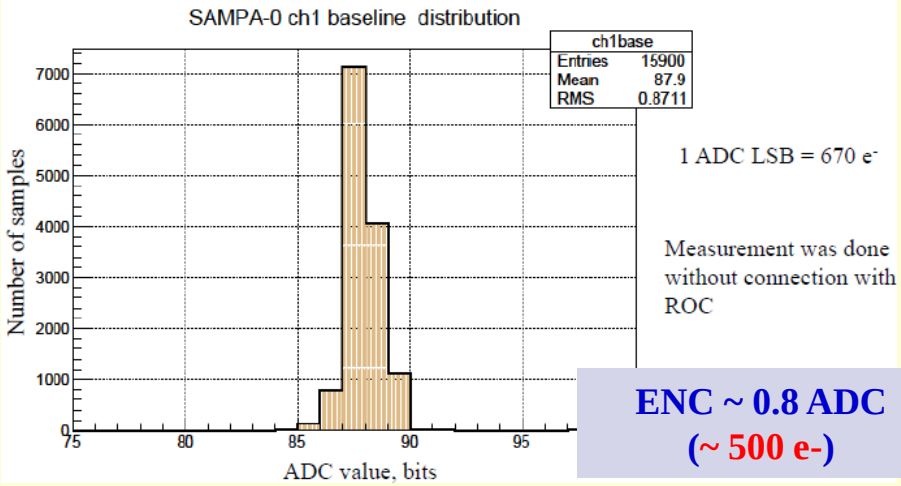

ENC ~ 0.8 ADC (~ 500 e-)

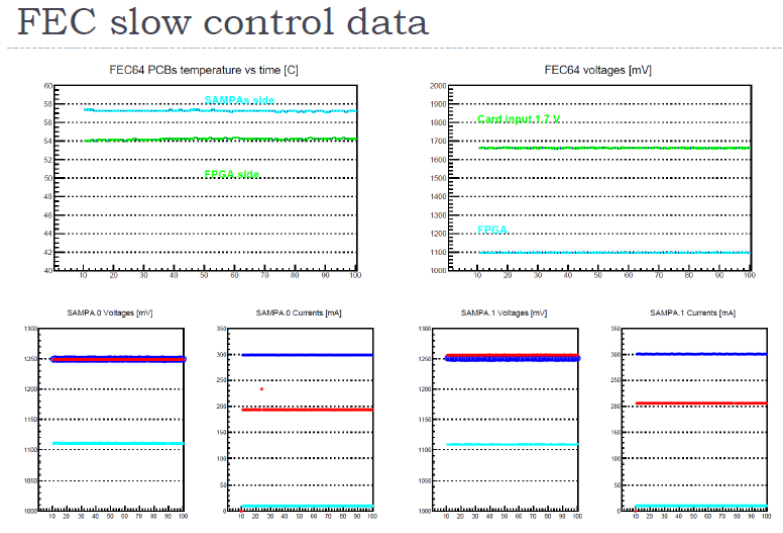

SAMPA chips (4500 pc) delivered to JINR - June 2019

ROC+FECs tests

TPC electronics: RCU status

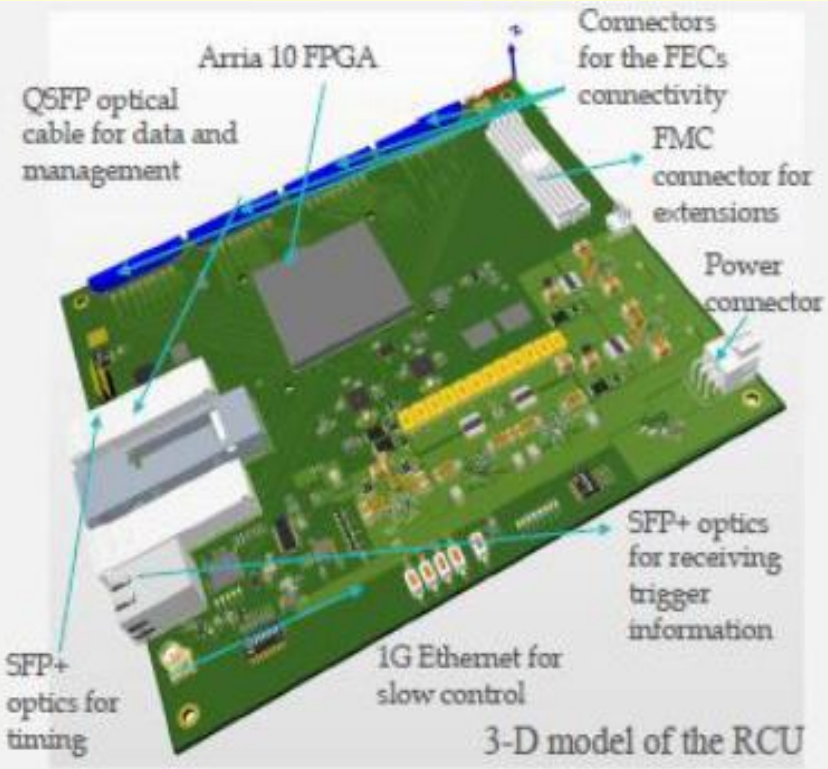

3-D model of the RCU

Flow Summary

Flow Status	Successful - Fri Sep 25 14:47:14 2020
Quartus Prime Version	19.4.0 Build 64 12/04/2019 SC Pro Edition
Revision Name	RCU_A10
Top-level Entity Name	top
Family	Arria 10
Device	10AX115S2F45I2SG
Timing Models	Final
Logic utilization (in ALMs)	30,152 / 427,200 (7 %)
Total registers	64031
Total pins	453 / 960 (47 %)
Total virtual pins	0
Total block memory bits	30,389,984 / 55,562,240 (55 %)
Total RAM Blocks	1,894 / 2,713 (70 %)
Total DSP Blocks	2 / 1,518 (< 1 %)
Total HSSI RX channels	70 / 72 (97 %)
Total HSSI TX channels	70 / 72 (97 %)
Total PLLs	81 / 144 (56 %)

The RCU firmware design compilation flow summary.

- Intel 20nm FPGA Arria 10 was selected as a base of data readout.
- Embedded 72 transceivers are sufficient to implement the RCU on a single FPGA.
- ALMs and memory resources allow implementing all the necessary data transfer system algorithms
- Excess FPGA resources allow further system improvement

S.Vereschagin, JINR, Alushta-2020 15

TPC electronics: status and schedule

ROC+FECs tests

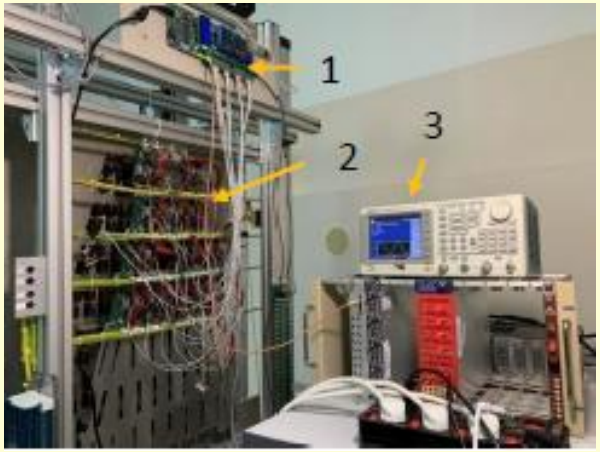

1) RCU prototype;
2) FECs installed on the ROC;
3) Trigger signal generation system;

Item	Date	
Testing 512-channel system (FEC v1.0) finished	Jan. 2019 ✓	
Testing 256-channel system (FEC v2.0) finished	Feb. 2019 ✓	
Preproduction version FEC PCBs sent for fabrication	Mar. 2019 ✓	
Half-ROC readout system base design finished	Mar. 2019 ✓	
Receive SAMPA V4 chips at Dubna	Jul. 2019 ✓	
34 preproduction version FEC assembled and tested	Nov. 2019 ✓	
32 preprod. version FEC installed on Pilot 2048 ch. Syst.	Dec. 2019 ✓	
Instrumented Half ROC system testing	Feb. 2020	done
Testing instrumented ROC finished	Apr. 2020	in progress
Production version FEC PCBs ready	May 2020	Oct 2020
1st batch of prod. ver FEC (130 pcs) fabricated	Jul. 2020	
2nd batch of prod. ver FEC (800 pcs) fabricated	Sept. 2020	2021
3rd batch of prod. ver FEC (800 pcs) fabricated	Dec. 2020	

Test ROC with FECs (2048ch) – **in progress**
Preproduction option FEC - **manufactured**
Serial FEC manufacture - > **2021**

Data concentrator ASIC (NRNU MEPHI)

65 nm CMOS process, Mixed-Signal, Low Power

Bi-directional interface, readout from 2 SAMPA chips (2.56 Gb/s speed, trigger mode, rad-tolerant)

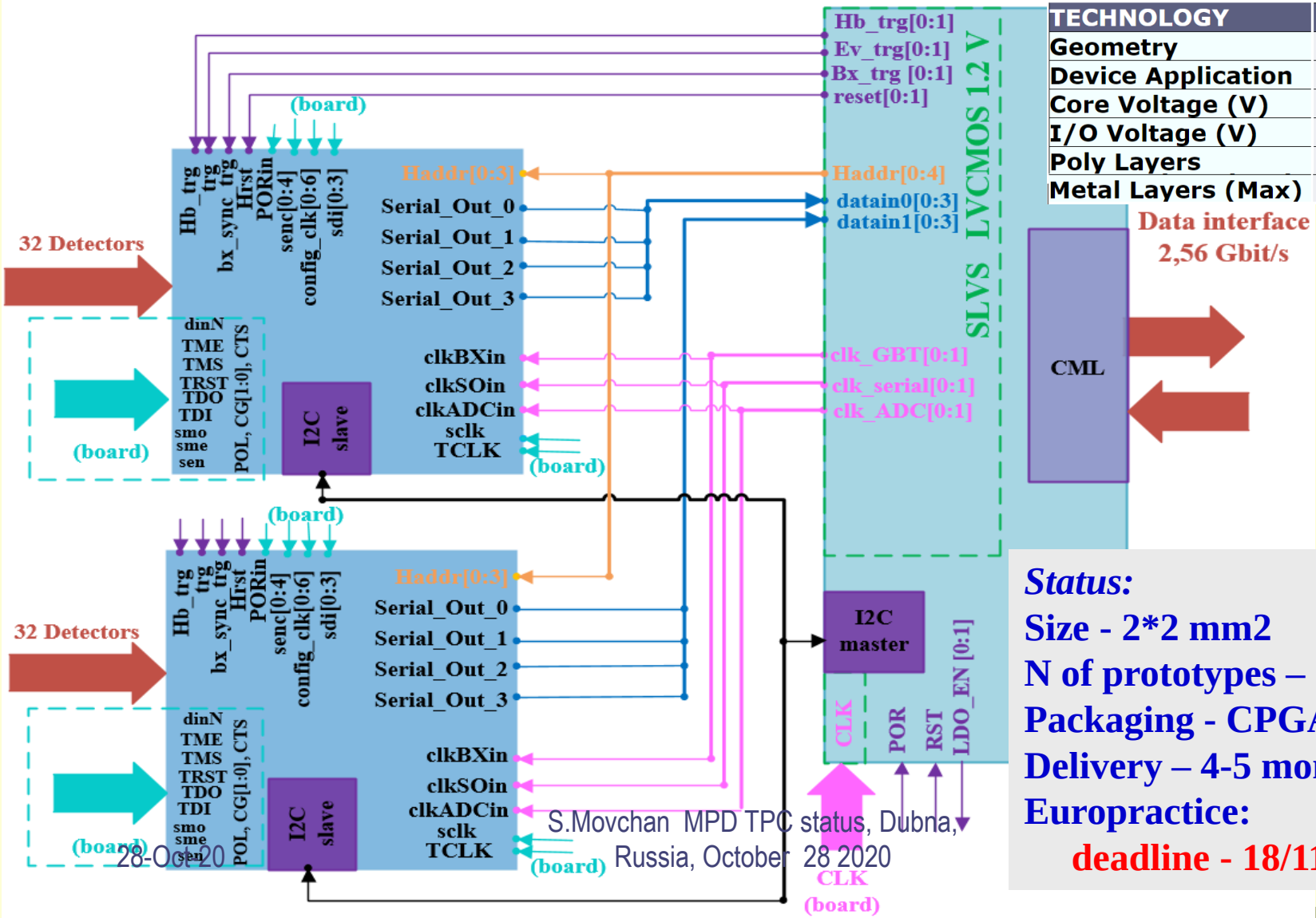

TECHNOLOGY	MS/RF
Geometry	65 nm
Device Application	Low Power
Core Voltage (V)	1.2V
I/O Voltage (V)	2.5V
Poly Layers	1
Metal Layers (Max)	9

Status:

Size - 2*2 mm2

N of prototypes – 100 pcs

Packaging - CPGA120 case

Delivery – 4-5 months

Europractice:

deadline - 18/11/2020

for more info see next talk =>

Development of data concentration method and its implementation in radiation-tolerant CMOS ASIC

Eduard ATKIN, evatkin@mephi.ru

The project is supported by RFBR grant no. 18-02-40093 (headed by V. Samsonov)

TPC LV+HV system

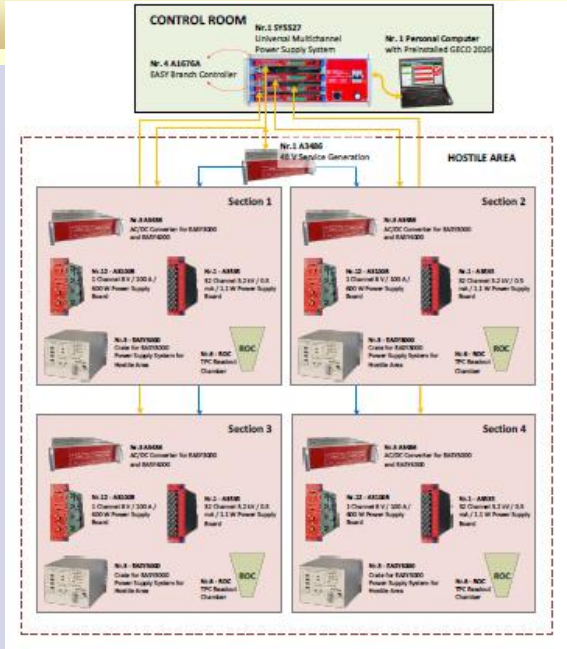

LV&HVsystem based on CAEN rad. hard design:

(up to 2000 Gauss and 15 kRad)

- **power converters A3486 AC/DC (380 V -> 48 V) – 13 pc**
- **EASY3000 crates – 12 pc**
- **LV module - A3100B (2÷7V/100A) – 55 pc**

Status:

- ***test system – delivery Nov 2020***
- ***TPC LV+HV system Part 1 (from 3) – ordered***

LV cables (halogen free, low smoke):

S=50 mm2 – delivered to JINR (Dec 2019)

S=120 mm2 – delivered to JINR (Dec 2019)

HV cables - ordered

LVDB boards (60 pc) - delivered

INP BSU (Minsk)

Team for cabling and piping – contracted

TPC gas system

Gas supply

Commissioning - in progress

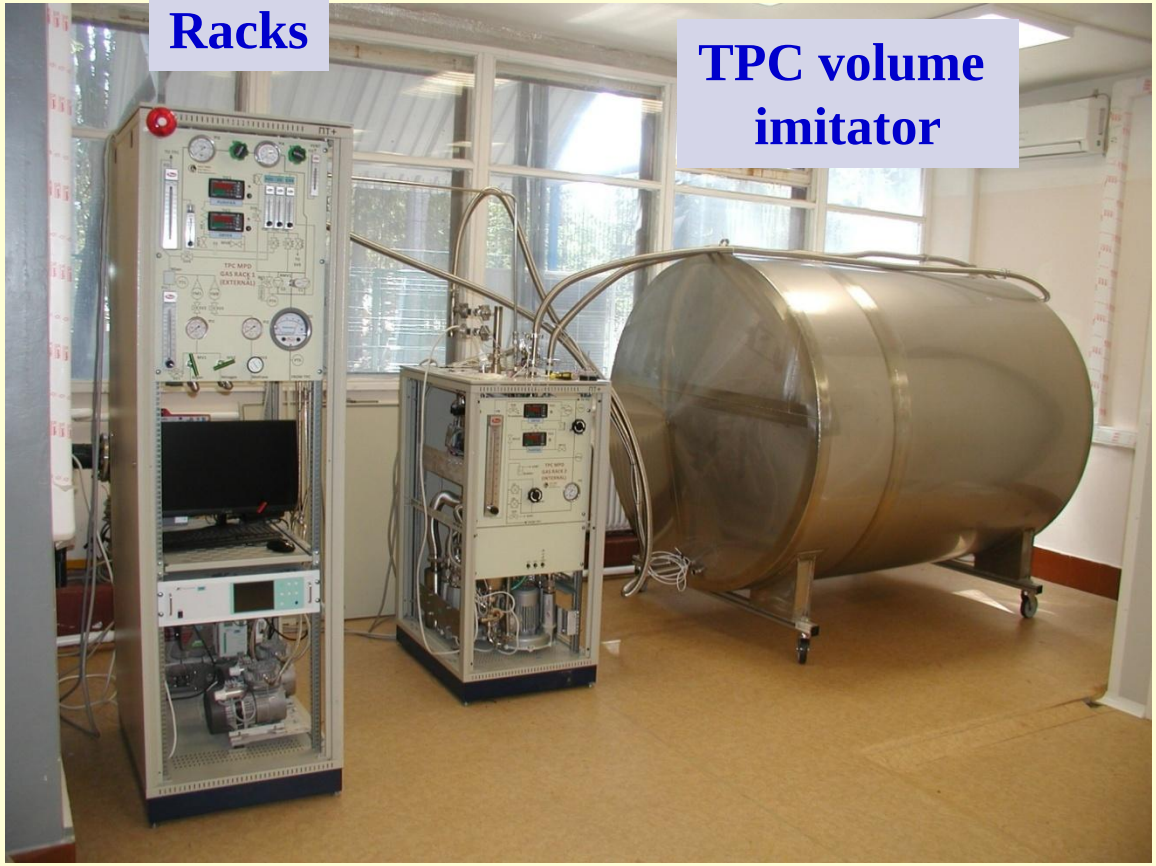

Status - commissioned (Bld.217)

TPC cooling system

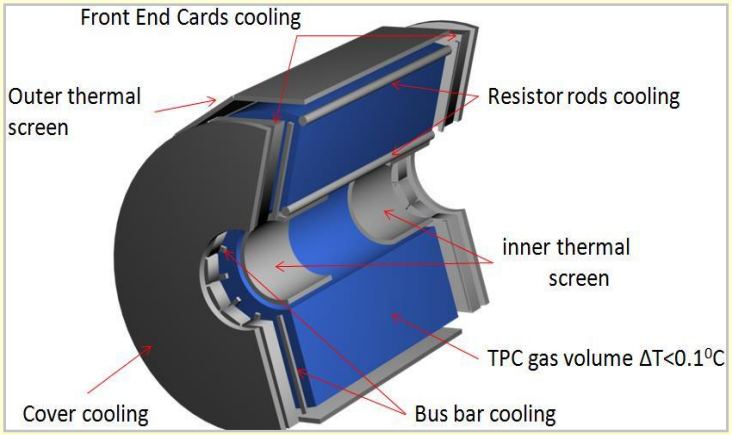

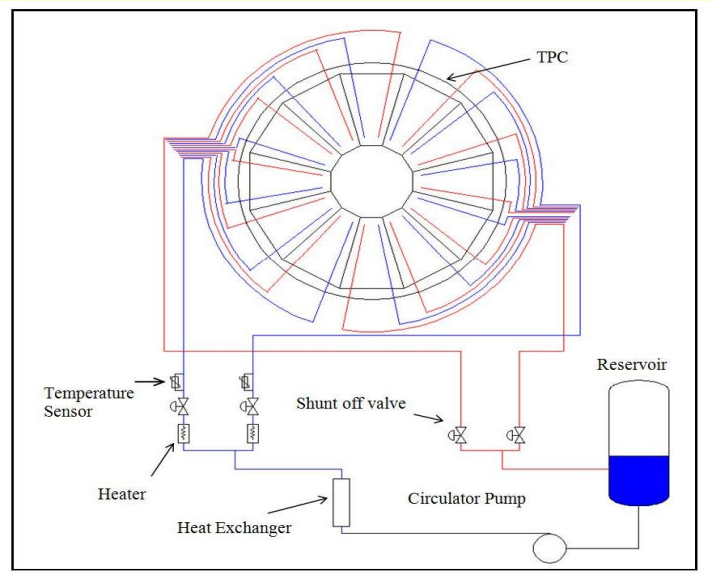

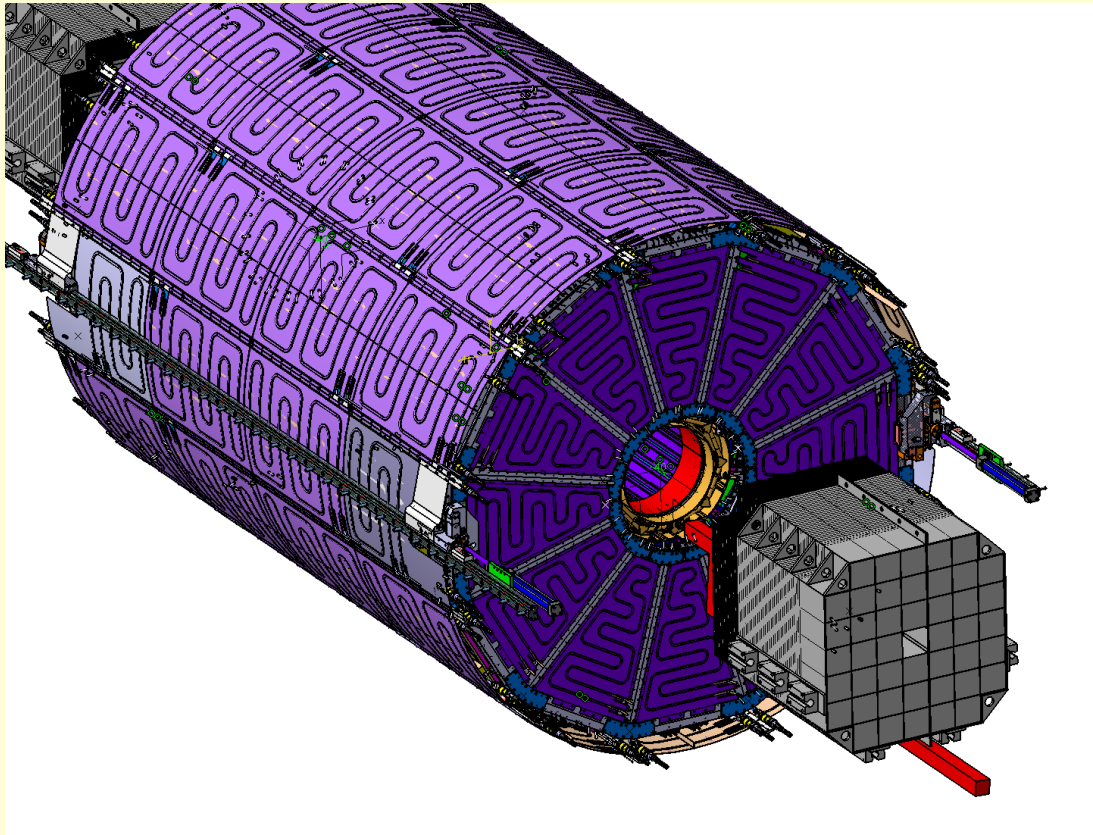

Barrel part – shorter and fixed to TPC instead TOF structure

TPC: FE cooling prototype №3 (INP BSU Minsk)

combination of proto 1+ proto 2

Bottom cooling plates

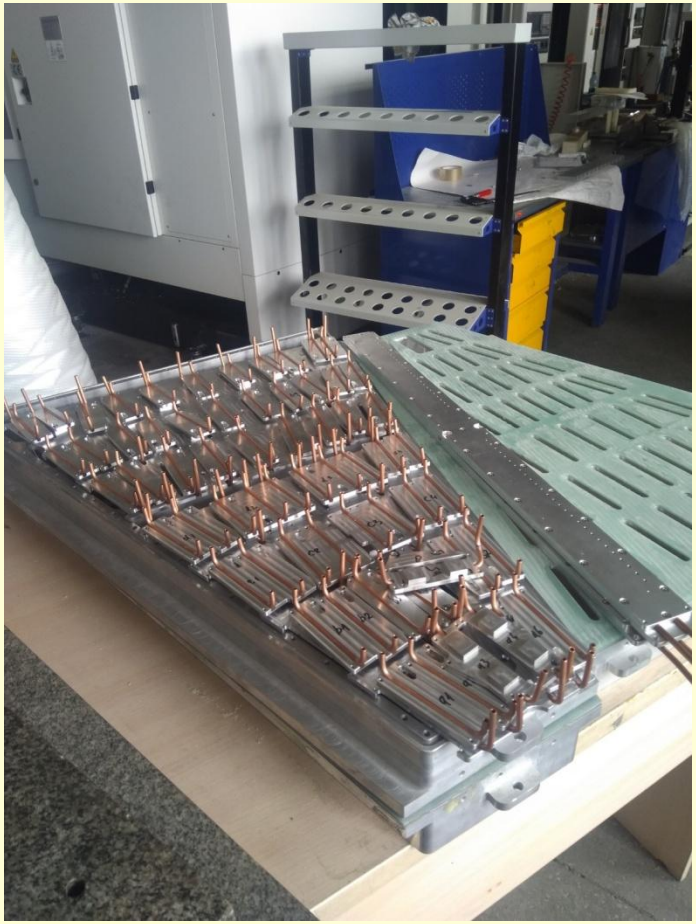

Set of top cooling plates

Cu tube Din - 3.36 mm
Plates thickness - (4+4) мм

TPC: FE cooling prototype №3 (INP BSU Minsk)

combination of proto 1+ proto 2

TPC electronics cooling: test results

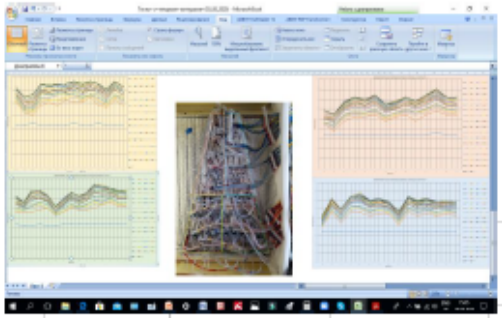

Power off/on

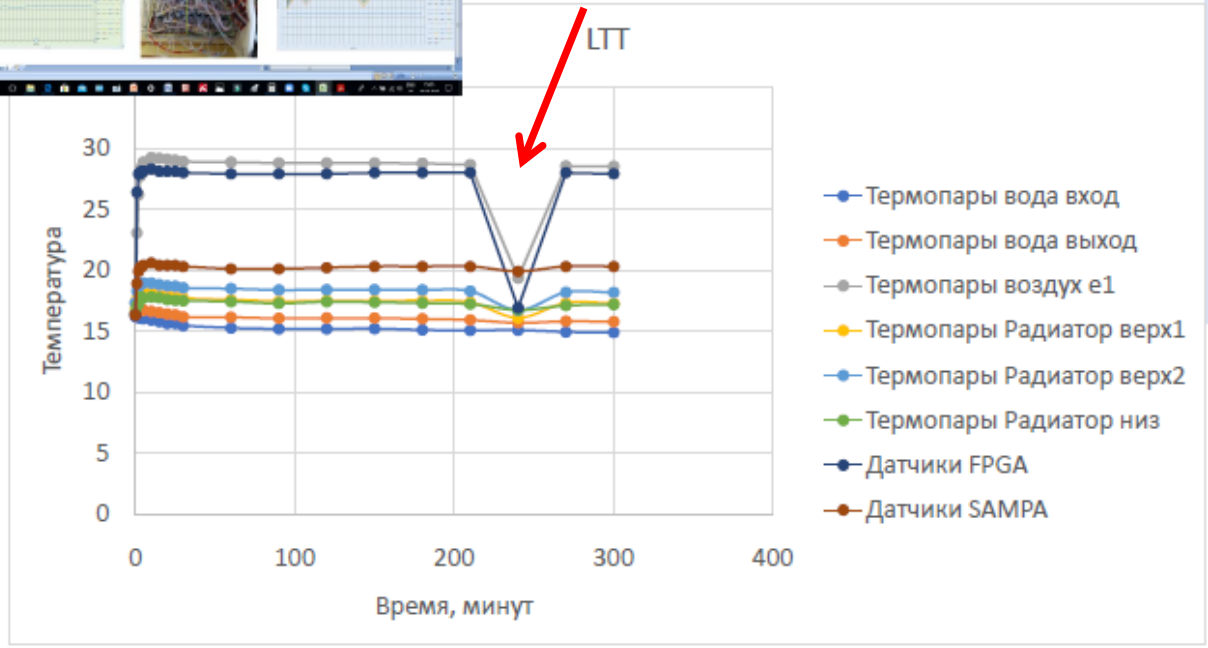

Test conditions:

- FE imitators – 62 pc
- Thermopads – 2 types
- Total power – 300 W
- Input water - T= +15 degree
- Water flow – 0.22 l/min per sub-loop
- Time of T stabilization – about 1 h

PCB temperature:

- SAMPA boards - T= 20.3 degree
- FPGA boards - T= 28.0 degree

T chip <= 80 degree (from simulation)

Measurements - in progress

Start test with real FE cards at Dubna – December 2020

Preproduction option – in manufacture

TPC cooling system: prototype and software

Прототип системы температурной стабилизации.

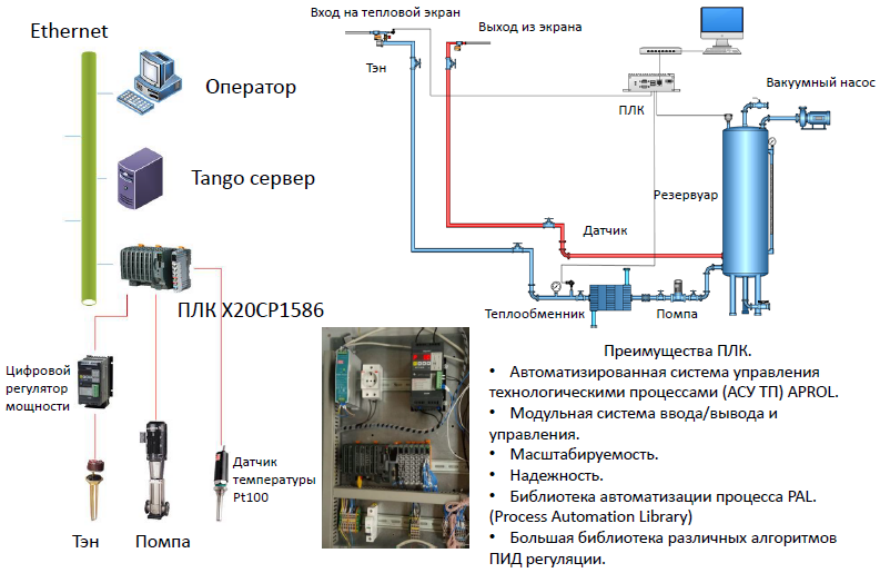

Преимущества ПЛК.

- Автоматизированная система управления технологическими процессами (АСУ ТП) APROL.
- Модульная система ввода/вывода и управления.
- Масштабируемость.
- Надежность.
- Библиотека автоматизации процесса PAL. (Process Automation Library)
- Большая библиотека различных алгоритмов ПИД регуляции.

Система управления.

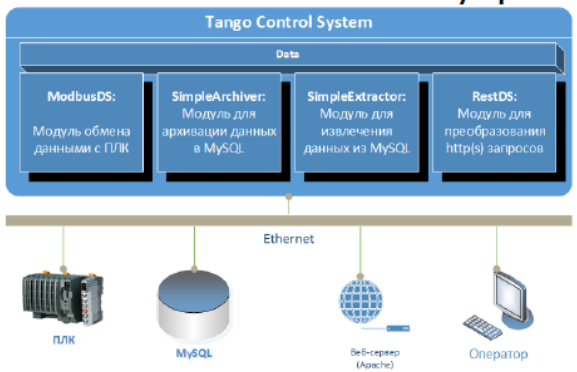

Преимущество SCADA Tango:

- Продукт бесплатный, с открытым исходным кодом;
- Мульти-платформенная система (Windows, Linux);
- Является одним из стандартов для организации систем управления;
- Имеет развитую инфраструктуру;
- Хорошо отлажена;
- Надежна в работе;
- Активно развивается;
- Удобна в использовании;

WEB интерфейс.

- Кроссплатформенность.
- Адаптация интерфейсов для отображения на персональном компьютере или на мобильном устройстве;
- Современные браузеры и развитые JavaScript библиотеки дают возможность создания удобного и современного приложения;
- Может быть запущено требуемое количество экземпляров клиентского приложения на разных компьютерах или на вкладках браузера;

WEB интерфейс оператора

Клиентская часть выполнена в виде одностраничного веб-приложения.

Start of prototype tests – Dec 2020

TPC laser calibration system: laser beams layout

½ TPC

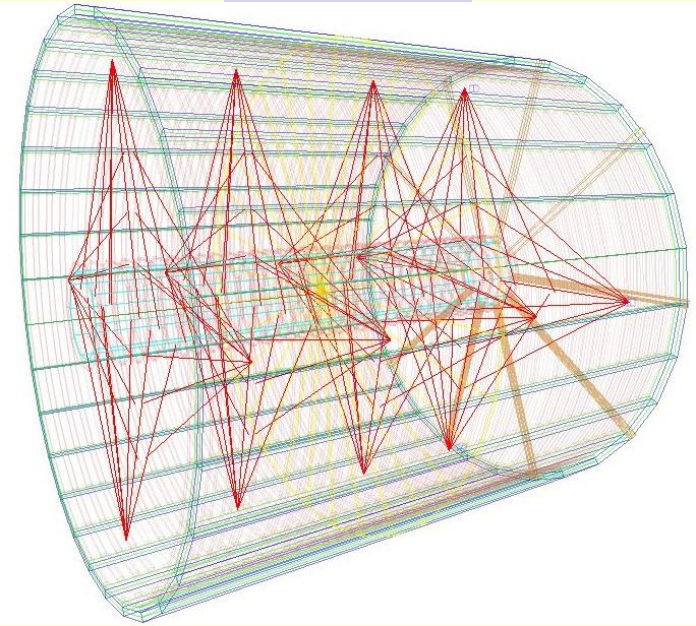

TPC

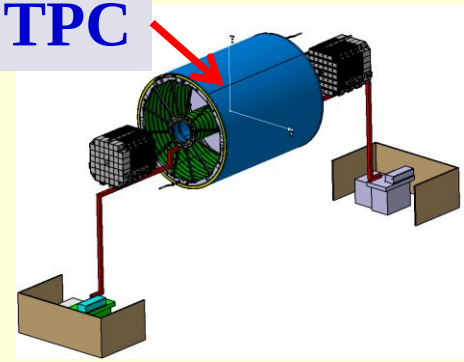

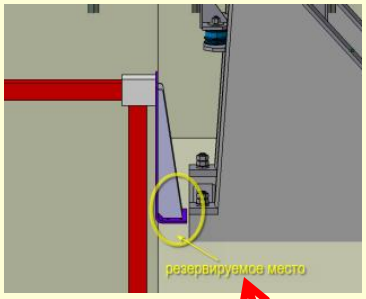

micro-mirror bundles

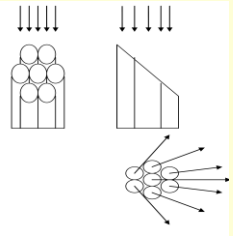

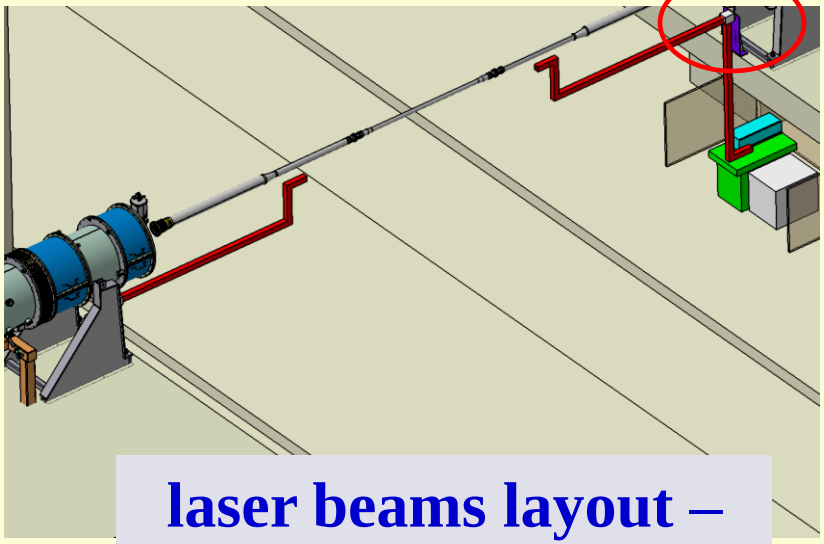

laser beams layout – fixed

Laser “planes”	- 4
Micro-mirrors bundles per plane	- 4
Beams from micro-mirrors bundle	- 7
Laser “tracks”, N	- 224

TPC laser calibration system

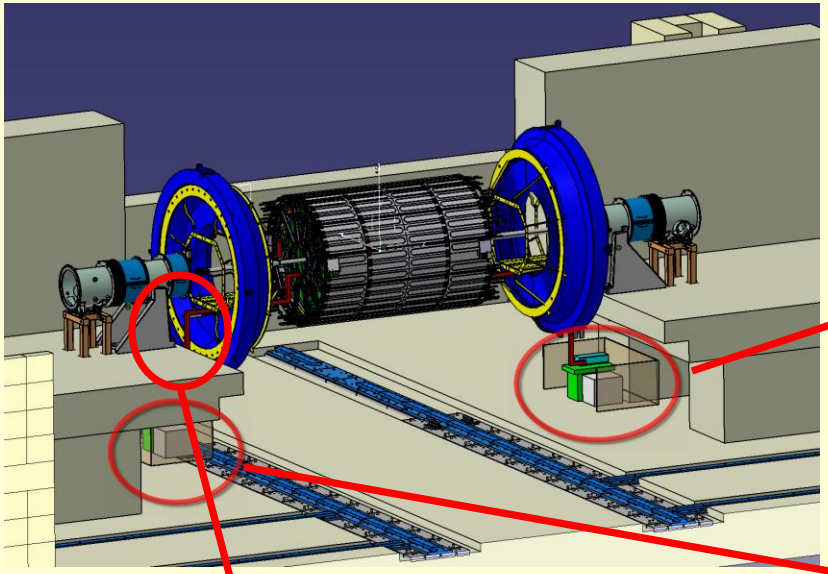

Optical table schemes

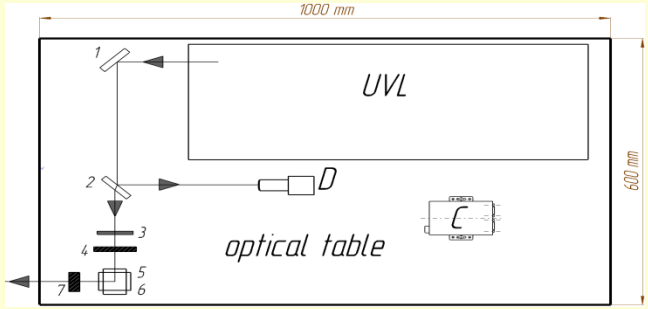

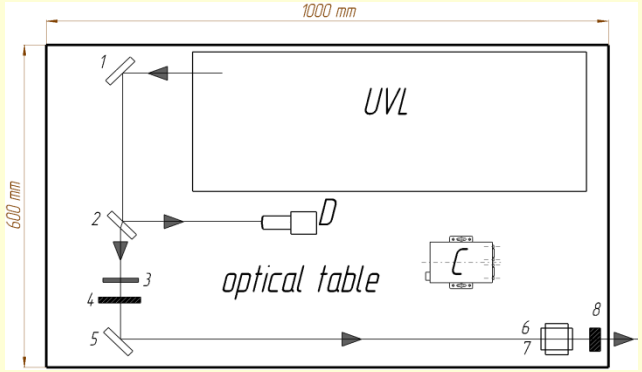

Short periscope scheme

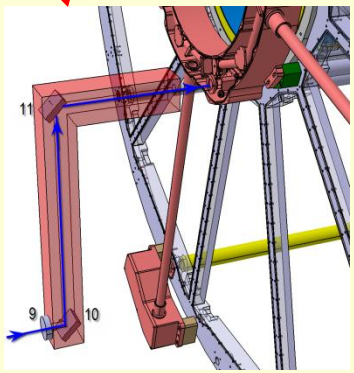

- optic table (2 pc) - delivered
- optical components (2 sets) – ordering in progress
- short periscope (2 pc) – ordering in progress

TPC laser calibration system

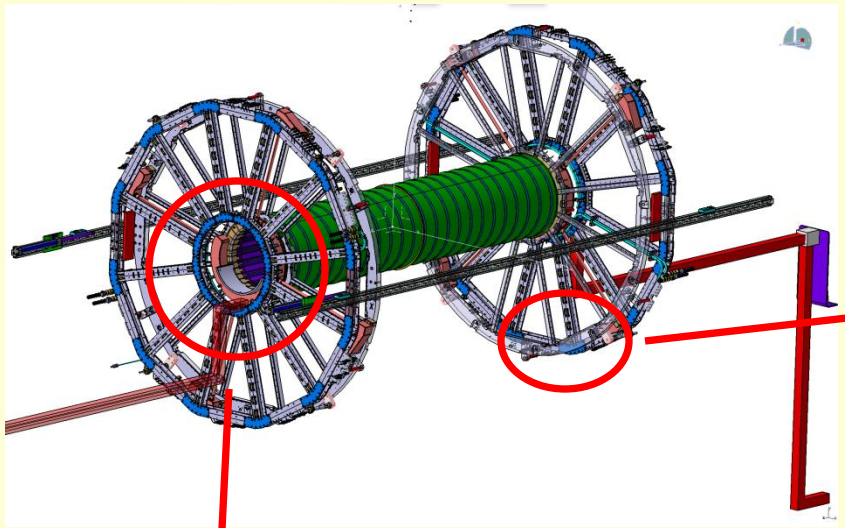

Semi transparent mirror & prism

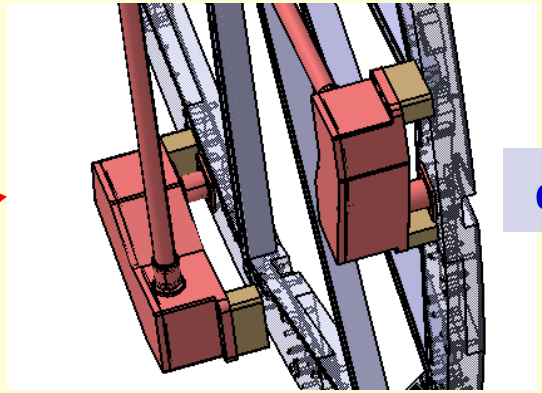

delivered

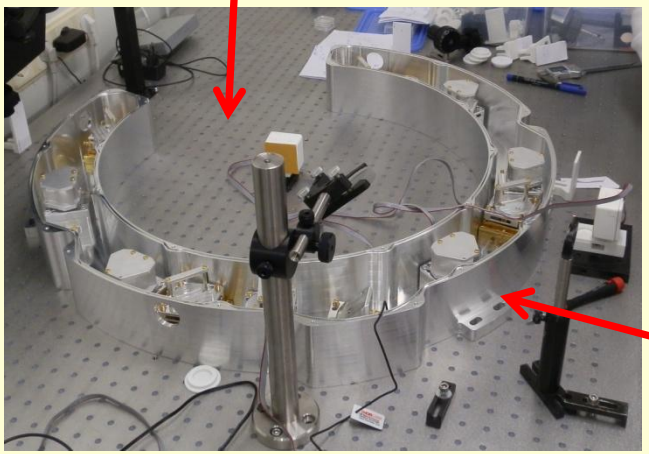

- full set of micro-mirror bundles - assembled
- 2 lasers – commissioned
- laser beam splitter – ready to installation
- laser beam monitors - prototype under tests

TPC cables and pipes integration

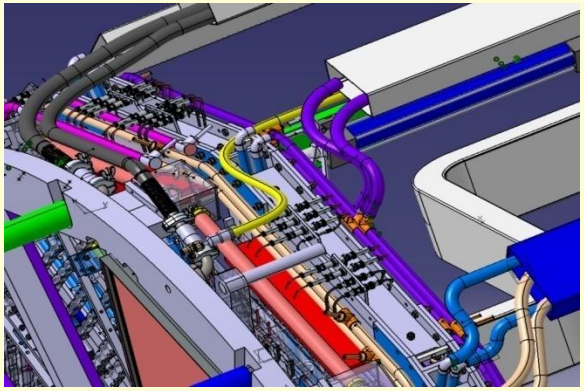

Trays layout concept

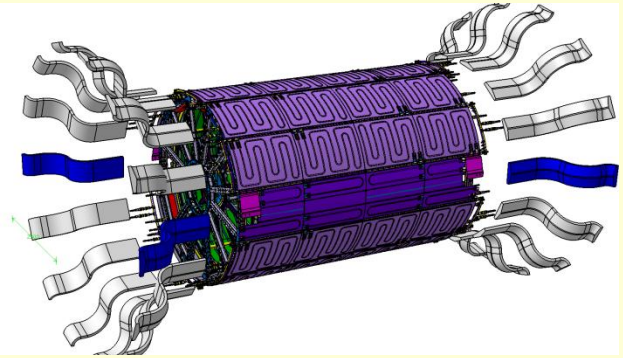

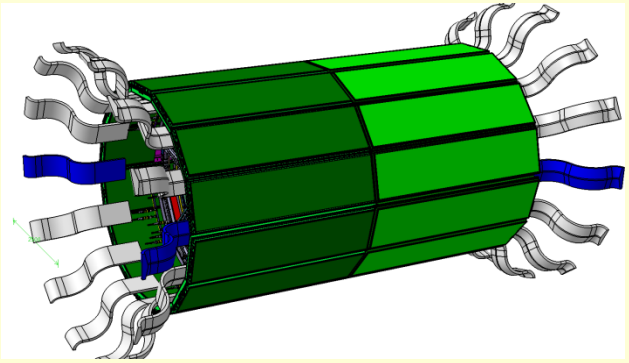

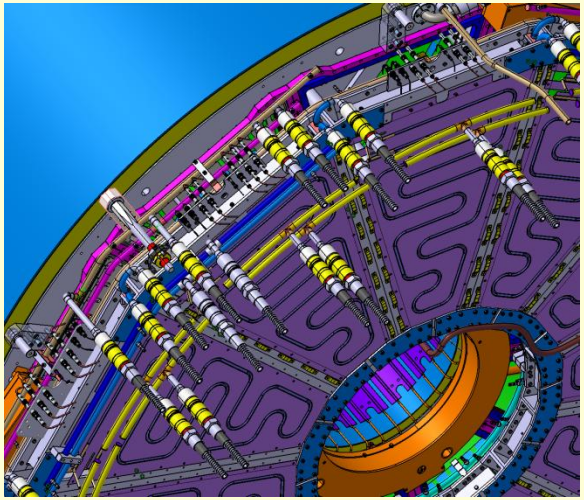

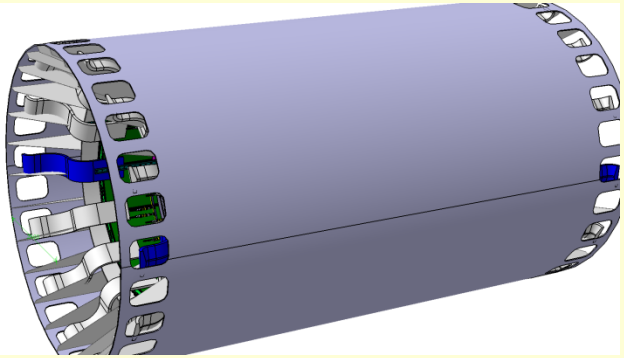

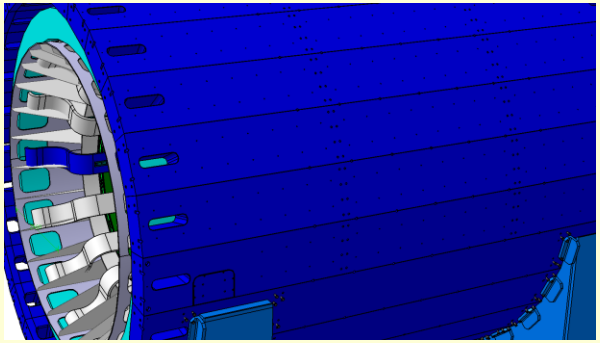

Optimization - in progress

Integration TPC to MPD

Integration TPC to MPD: concept

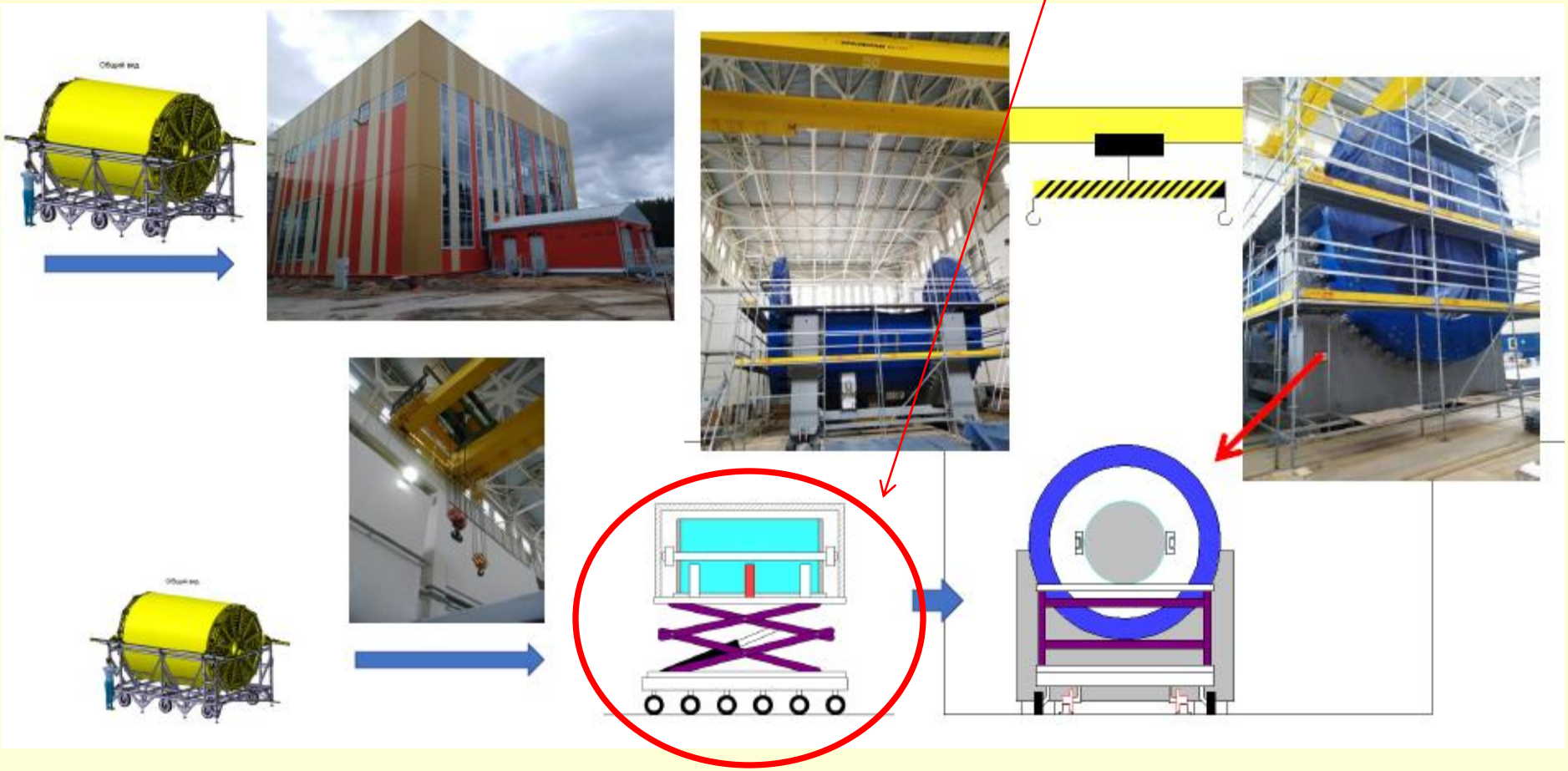

TPC schedule

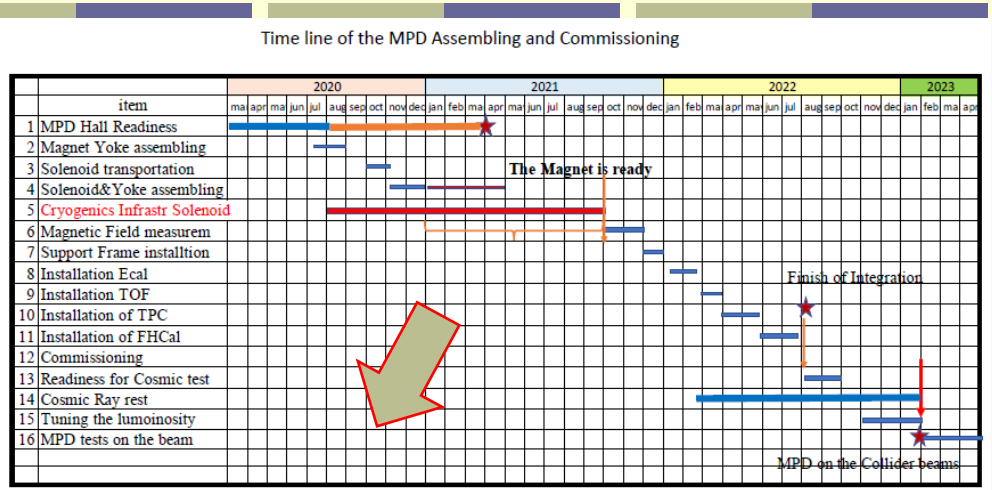

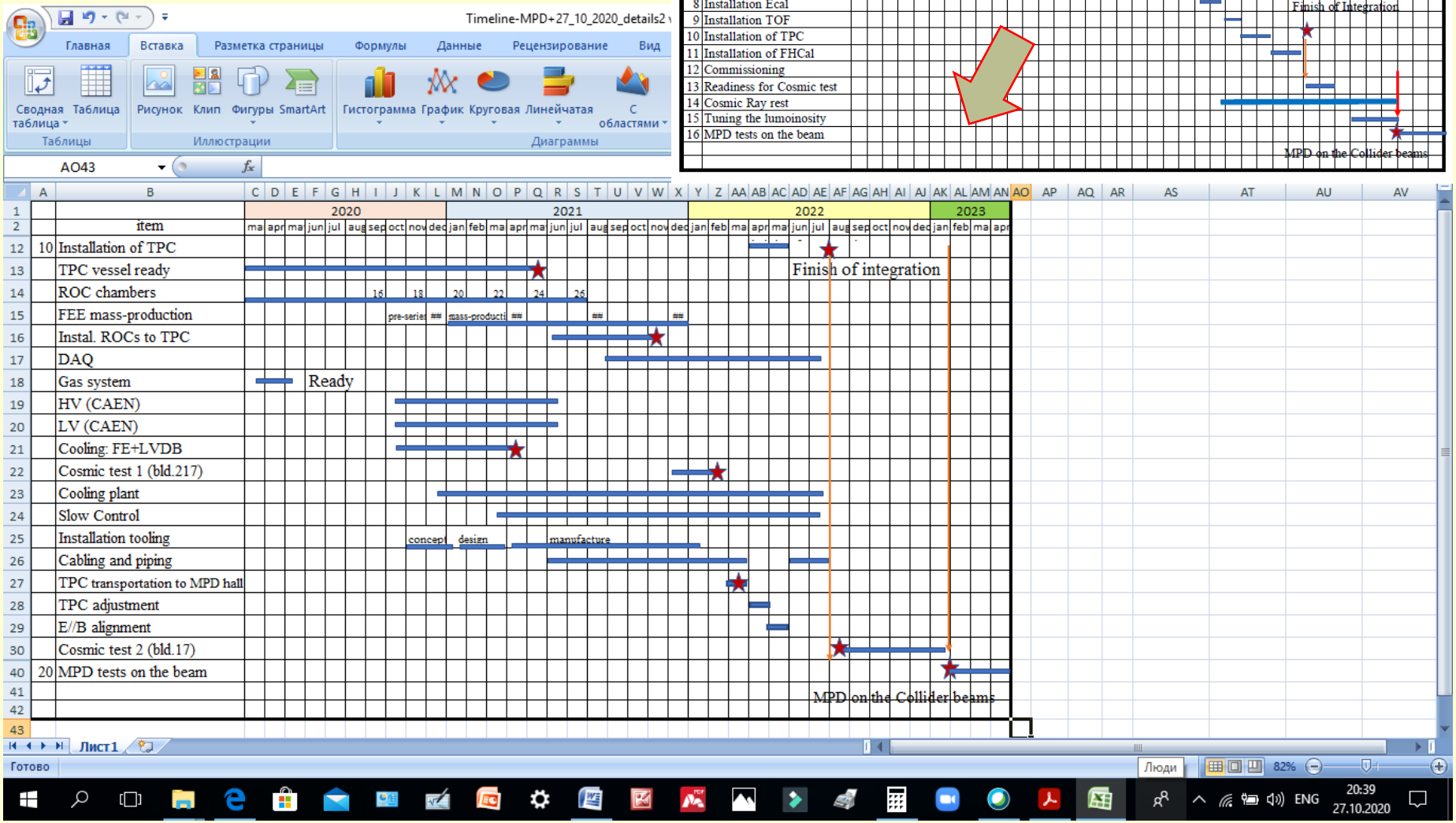

MPD event display - http://db-nica2.jinr.ru/ (V.Krilov)

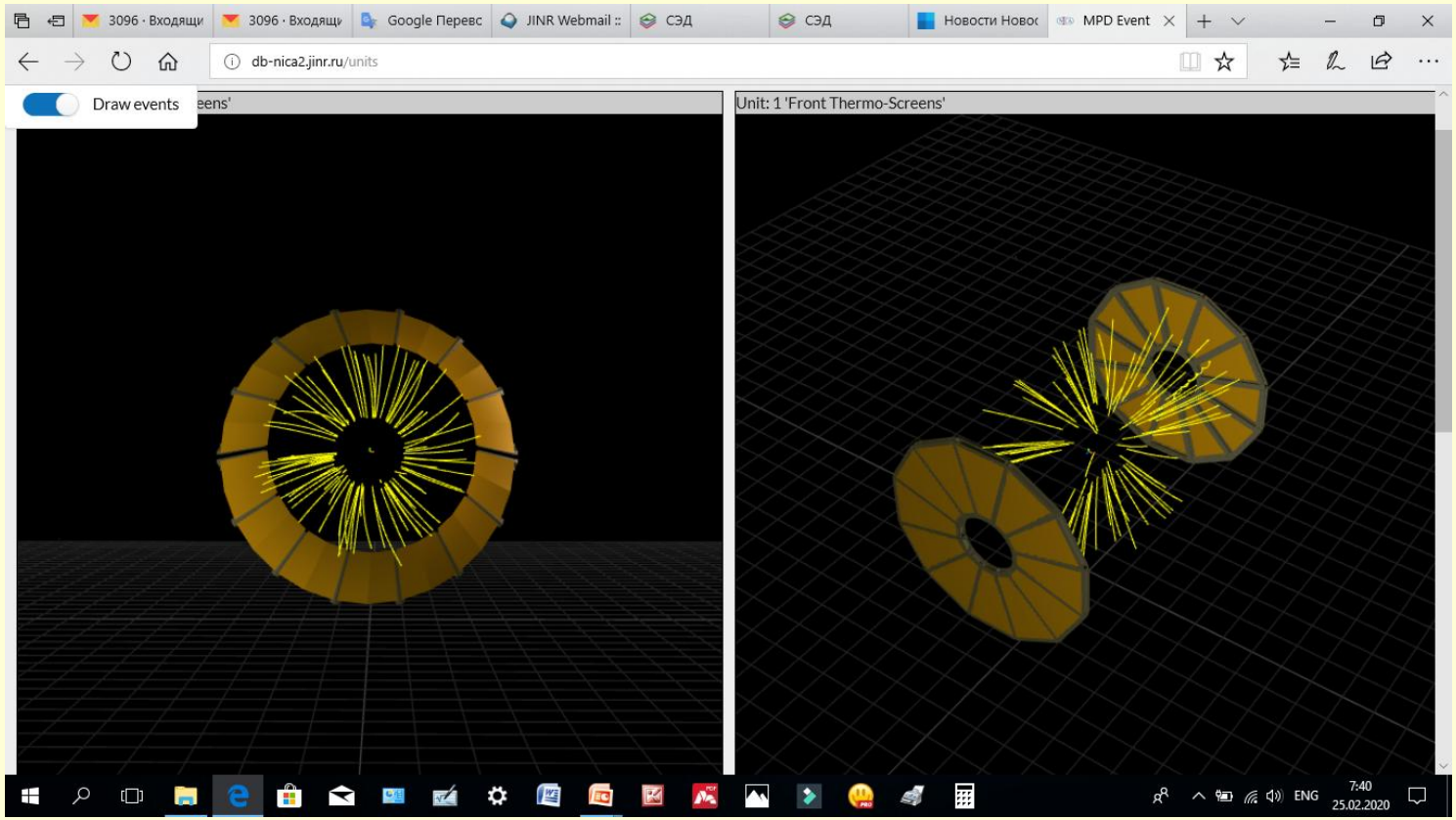

Example for TPC

http://nica.jinr.ru/
http://mpd.jinr.ru/

TPC TDR – http://mpd.jinr.ru/wp-content/uploads/2019/01/TpcTdr-v07.pdf

Thank you for attention!

SPARE

TPC: FE cooling prototype №1 (INP BSU Minsk)

Set up

FE power stabilization board

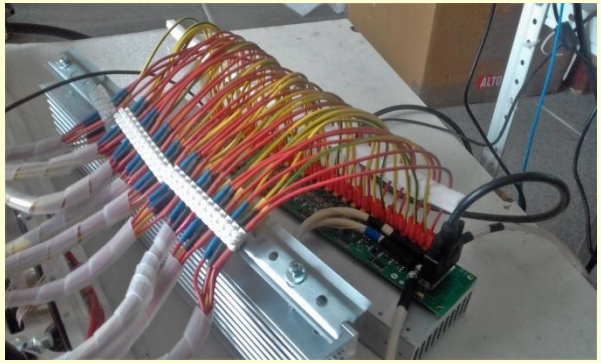

ROC + FE

Water - +17 degree
Al tube, Din - 6 mm
Flow - 6 l/min
CAEN - 177 W
(+3.5V/28.2A, +4/2V/22.0A)

FE power (31pc) - 134.9 W
Thermal pad - 0.8 W/m*K
Al plates thickness –(11+11) мм

Results:
SAMPA chips - (22-25) deg
FPGA chips - (28-33) deg
FE PS cables - 5.1 W

Disadvantages:
Radiation length - 25%
Impossible to do replacement of FE cards
=> New prototype №2

TPC: FE cooling prototype №2 (INP BSU Minsk)

Set up

Test sample

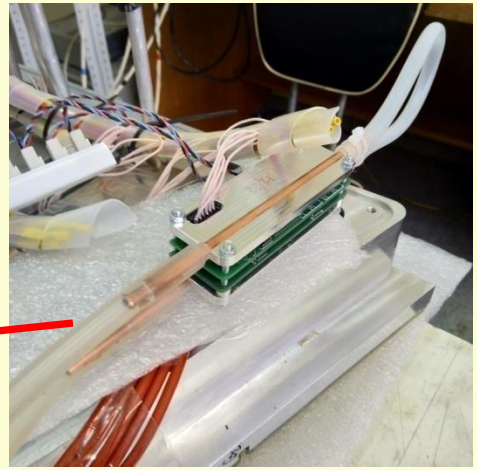

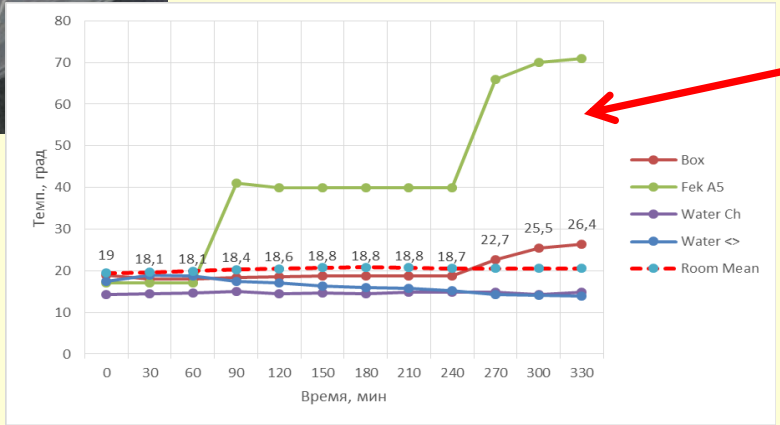

Water - +15 degree
Cu tube Din - 3.36 mm
Flow - (0.3-6) l/min

FE power (1pc) - 5.2 W
Thermal glue - 6 W/m*K
Plates thickness - (4+4) мм

Results:
FPGA chip - 28 deg (6 l/min)
- 40 deg (0.3 l/min)
- 70 deg (no water flow)

Advantages:
Radiation length - 9%
Easy FE cards replacement

=> Prototype №3

TPC and ROCs: summary

ROC chambers:

serial ROC chambers manufacture	- in schedule (16 pc tested + 2 pc - tests in progress)
frames (26 pc)	- ready
serial pad planes: last 8 pc	- connector soldering in progress
ROC gate system	- measurements and tests started
test chamber with 2048ch r/o system	- in progress

TPC assembly:

C3- C4 gluing	- done (Feb 18 2020)
C1- C2 gluing	- done
field cage rods (30 pc + 30 pc)	- manufactured
flanges finishing (add holes and grooves)	- -> November 2020
field cage mylar strips manufacture	- -> December 2020
start of TPC internal structure ass.	- -> Dec 2020 - Jan 2021

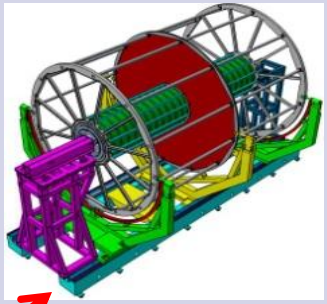

TPC transportation platform and manipulator for ROC chamber installation - ready

TPC slow control system: sub-systems status

LV system:

1) CAEN EASY3000 (crate SY5527 (1pc), crate EASY3000 (12pc), module A3486 AC/DC (400V) converter (13pc), module PS A3100B (55pc) **+** software **GECO 2020 - ok!**

2) Custom made power stabilizers (module LVN9 (60pc-ok)) **+** crate 6U (1pc), custom control units (12pc) + crate controller (1pc)+ PC + custom software) **- in progress**

HV system:

1) MWPC -> CAEN crate EASY3000 + modules A3535P/N 3.2kV/0.5mA – 6pc **- ok!**

Spare option: CAEN crate SY4527-2pc + modules A7236DN -3.5kV/1.5mA, A7236DP +3.5kV/1.5mA, A1542HDN -500V/1mA + software **GECO 2020 - ok!**

2) TPC HV electrode (- 30 kV): Iseg HV PS - ask quotation

3) ROC gate system: custom made system (crate – 2pc, modules –24pc, crate controller- 2pc + custom software) **– started**

DAQ:

Hardware: FEE64 (1488pc), ROC controllers (24pc), data servers (6pc) **+ TPC team firmware and software – in progress**

TPC slow control system: sub-systems status

Gas system:

Hardware: DAQ32 module + PC (PNPI, Gatchina) + **custom software – ok!**

Cooling system:

Hardware: NI (National Instruments (crate + ADCs) + 80 channels for hitters control + thermal sensors (100pc)) – **ok!, custom software - started**

Laser system:

Hardware: PC (1pc), industrial PC (2pc), controllers (2pc), cooling system (2pc), UV laser (2pc) – **ok!** synchronization module (1pc) and **custom software – design and software not started yet**

Trigger and synchronization – no info

Integration SC sub-systems to common TPC slow control system – not started yet


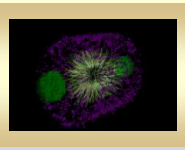

MPD TPC status 2020: summary


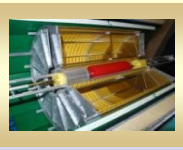

Status:

- **TPC:**
  - C1-C2 and C3-C4 cylinders - assembled
  - TPC internal structure assembly - –> start December 2020
- ROC chambers (24pc) - 16 pc tested, 2 pc – under tests
  - last 8 pc pad planes – in assembly
- **Electronics:**
  - FE electronics (next 32 cards) - delivered
  - RCU controller - design done, prototype manufacture
  - FE (32 cards) + ROC tests - in progress
  - FE cooling prototype 1, 2 and 3 - designed, manufactured, tested
  - FE radiators mass-production - December 2020
  - FE cards mass-production and tests - 2020 -> 2021
- **Sub-systems:**
  - local TPC DAQ - in progress
  - Gas system - commissioned, integration to MPD started
  - Cooling system: full set of thermal screen panels - delivered, FE cooling and system design - in progress
  - HV+LV systems - procurement started (CAEN)
  - Laser calibration system: UV lasers and beam distribution systems - delivered, rest parts - ordered
  - Slow control system – integration to common SC system not started yet
- **Cabling and piping:**
  - TPC cabling and piping - in progress
  - MPD TPC trays - in progress
- **Integration TPC to MPD**
  - TPC racks (5pc) layout - in progress
  - tooling for installation TPC to MPD - in progress
- **TPC schedule**
  - start of TPC commissioning - 2021