Status of the Time-of-Flight system of the MPD

Vadim Babkin on behalf of the TOF group of the MPD collaboration

Time-of-Flight system description

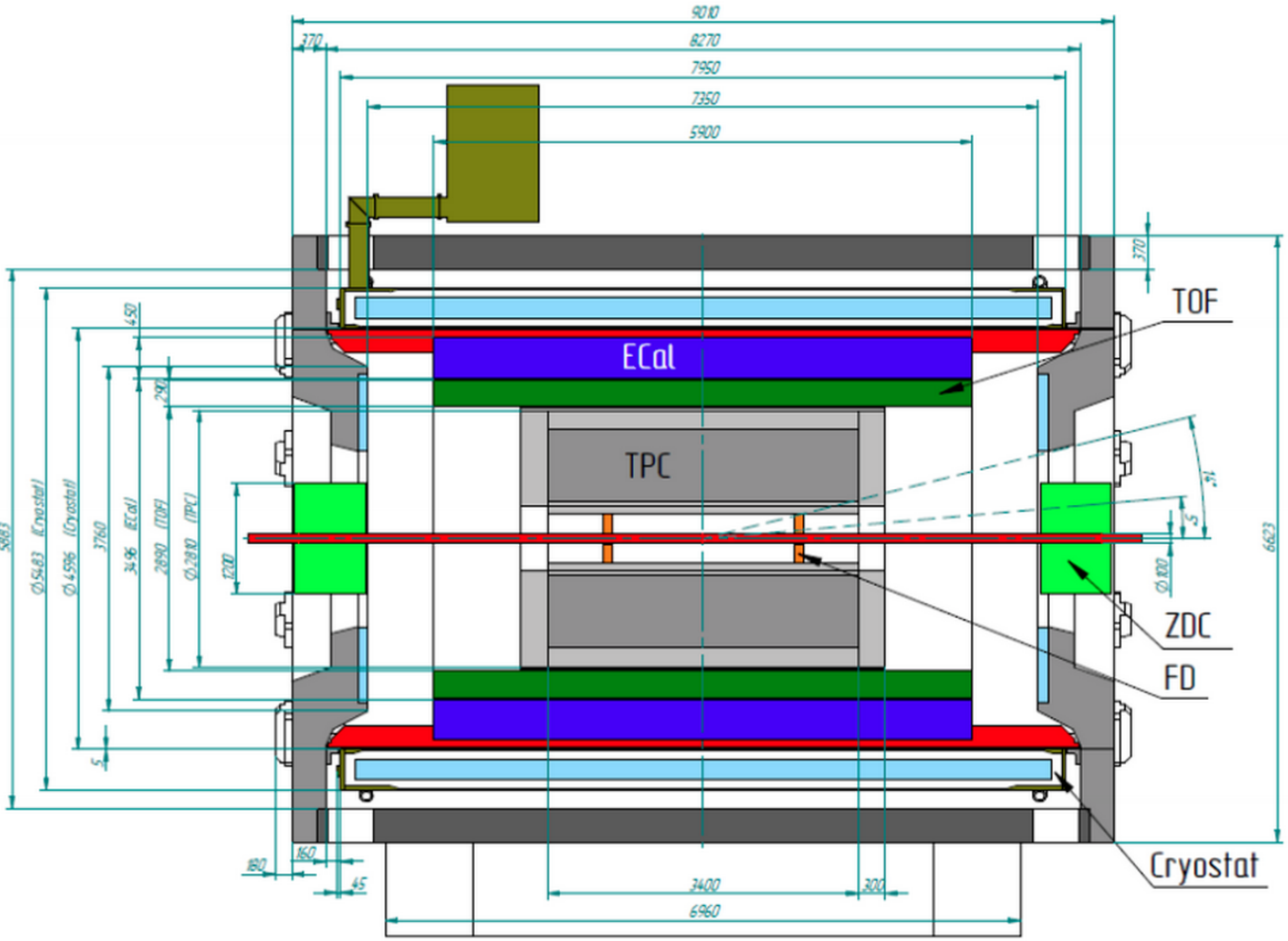

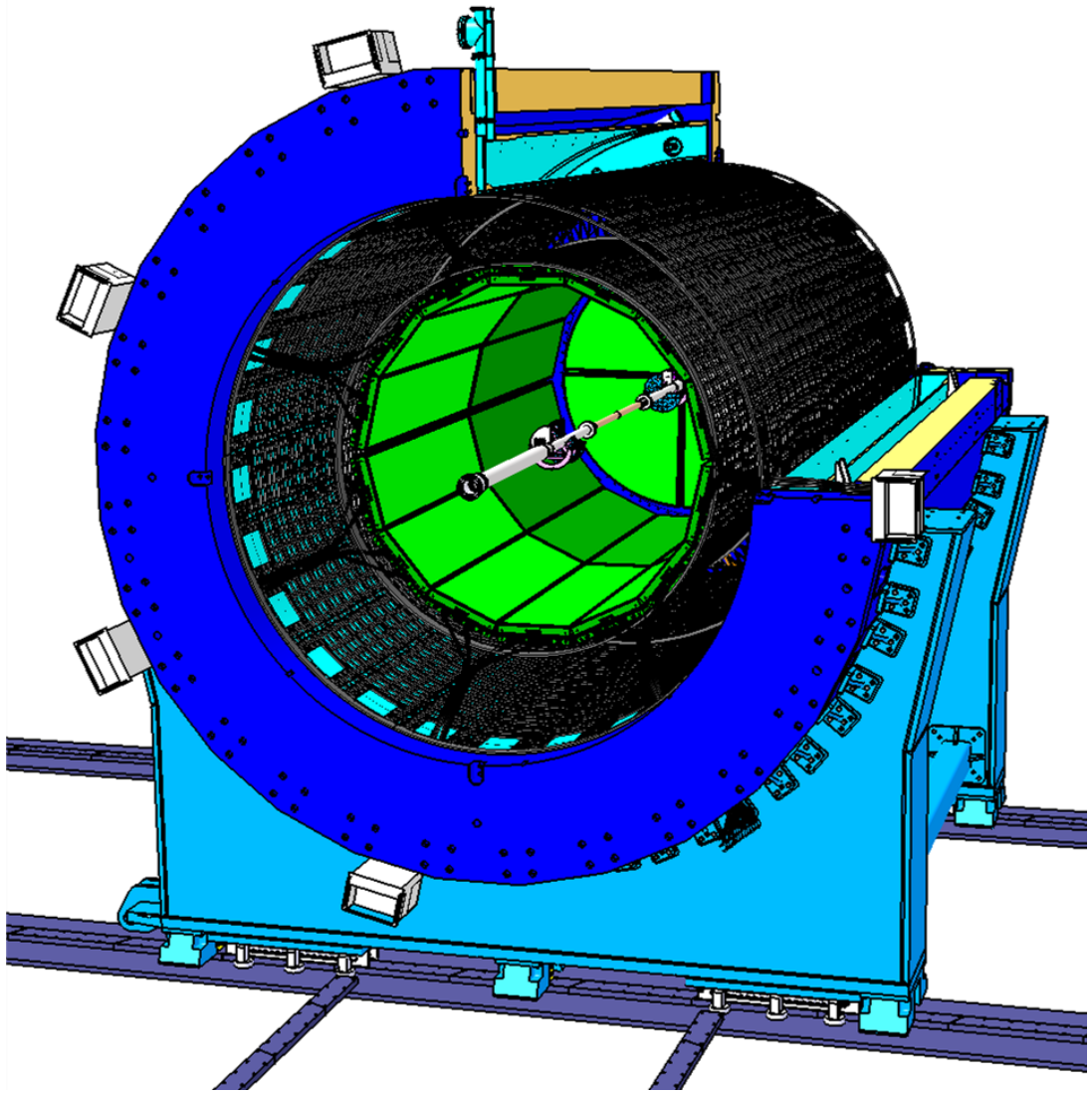

Time-of-Flight system description

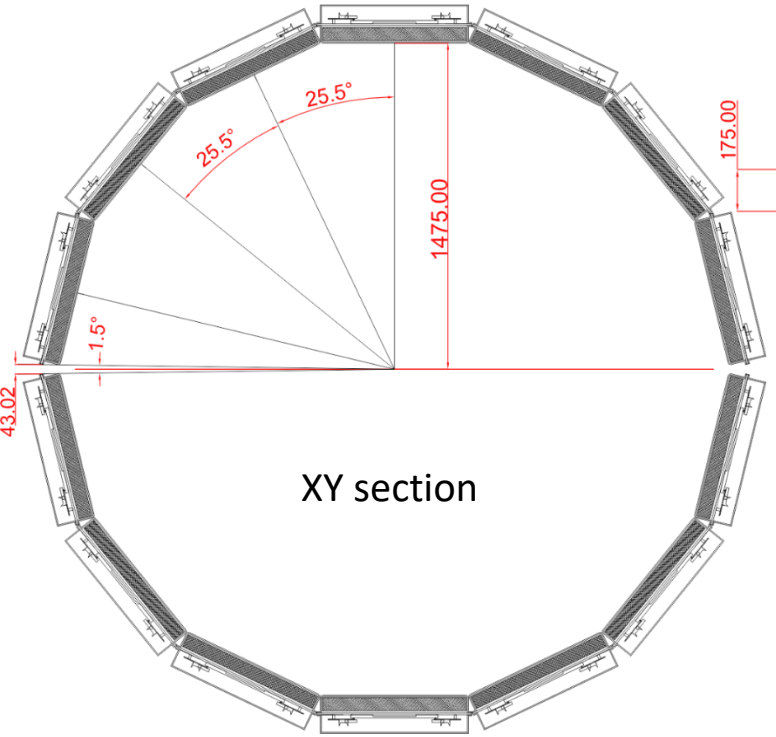

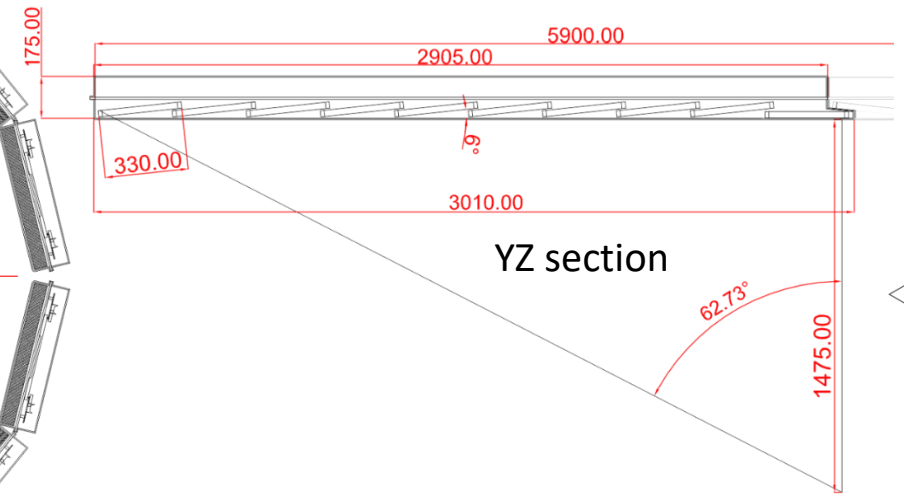

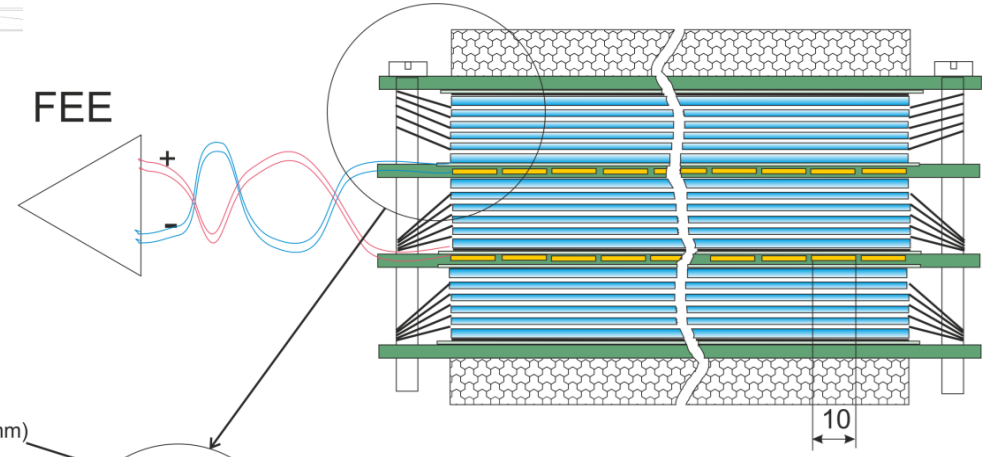

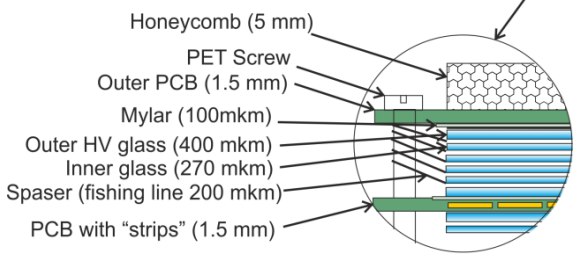

	Number of detectors	Number of readout strips	Sensitive area, m²	Number of FEE cards	Number of FEE channels
MRPC	1	24	0.192	2	48
Module	10	240	1.848	20	480
Barrel	280	6720	51.8	560	**13440** (1680 NINO)

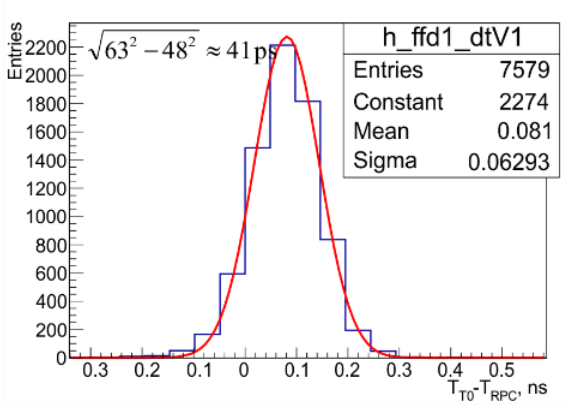

Time distribution between T0 and MRPC

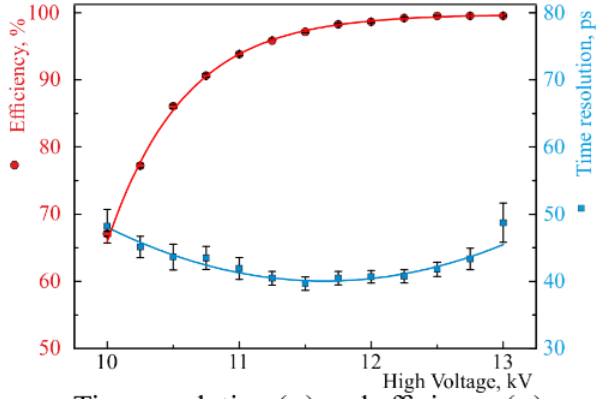

Time resolution (■) and efficiency (●)

Main problems of the TOF system production

1) Delay of the TOF detectors and modules production due to high dark currents during cosmic test
2) Problem of LV&HV cabling and distribution
3) Position of VME crates and cables on the MPD yoke
4) Integration equipment development
5) Gas supply and storage for the gas system in building 17

Problem of dark currents with new detectors

Various causes of the problem have been suggested:

1. Three last shipments of float glass with different and low resistivity
2. Not enough control of purity of water for washing glass
3. Different cleaning chemicals
4. Possible micro-damage of glass during cleaning in an ultrasonic bath

Actual time schedule of the TOF detectors assembling (in accordance with MPD time schedule)

Month/year	Weeks (working days)	Detectors per month (total)
October/2020	5 (25)	20 (**125**) (27/10/2020)
November/2020	4 (19)	15 (140)
December/2020	4 (23)	17 (157)
January/2021	3 (15)	12 (169)
February/2021	4 (19)	15 (184)
March/2021	4 (19)	15 (199)
April/2021	5 (24)	20 (219)
May/2021	3 (16)	12 (231)
June/2021	4 (19)	15 (246)
July/2021	5 (25)	20 (266)
August/2021	4 (20)	15 (281)
September/2021	5 (25)	19 (300)

HV&LV cables and distribution

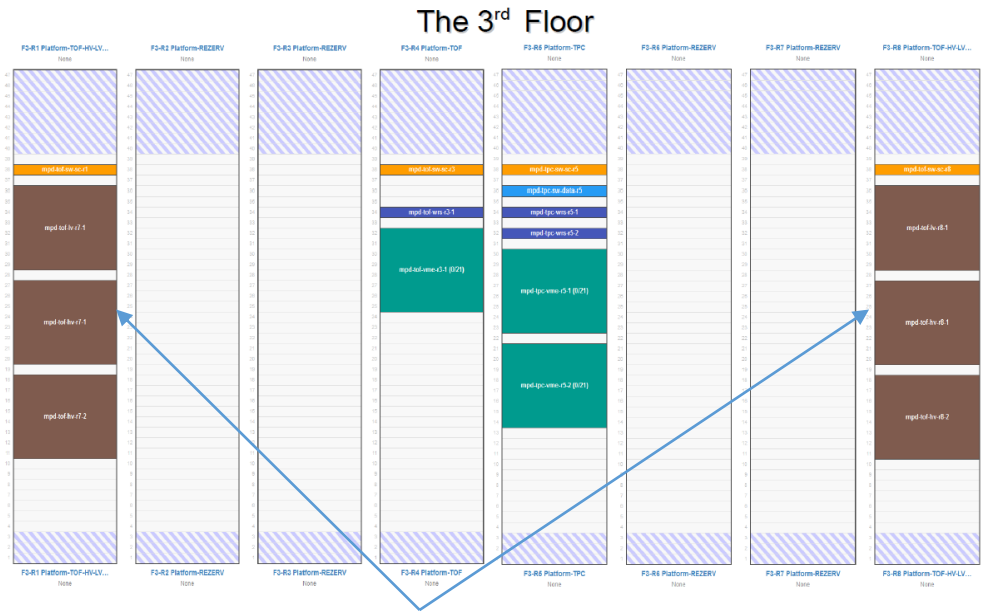

TOF Power racks on the platform
4 HV (+&-) and 2 LV Mpod crates

HV for 280 detectors (±6 kV)
LV for 560 preamps (+5 V)

~15-30 m

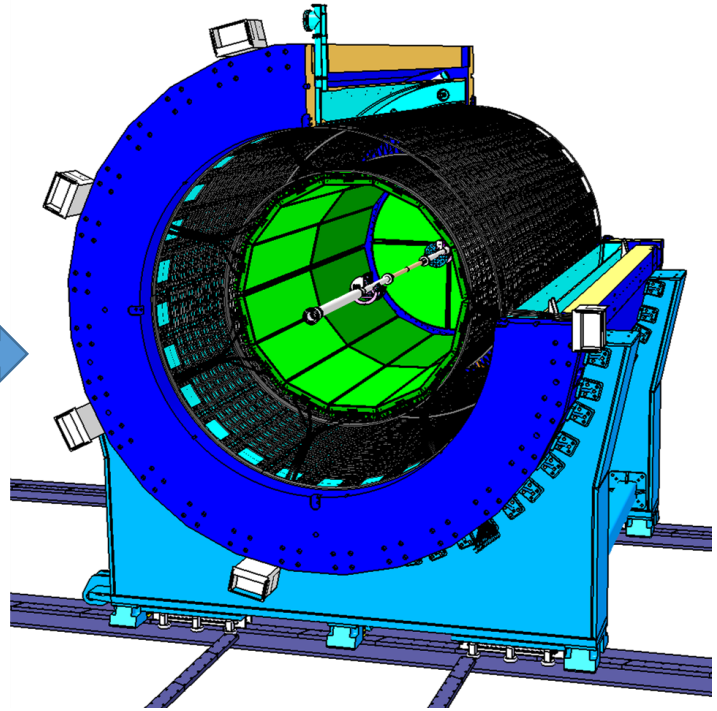

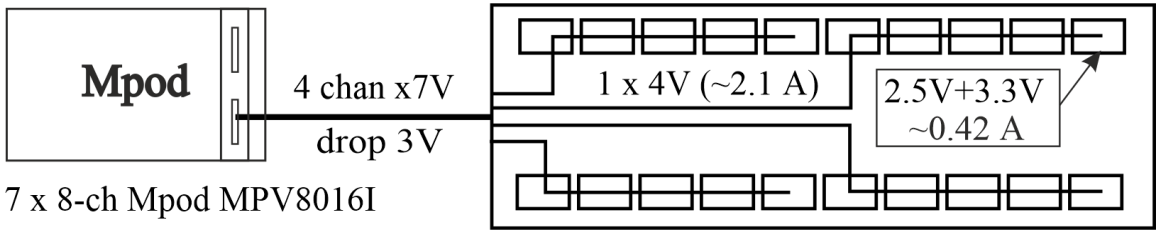

Low voltage distribution scheme

32 (needed 28) LV power cables
of different lengths are ordered

HV&LV cables and distribution

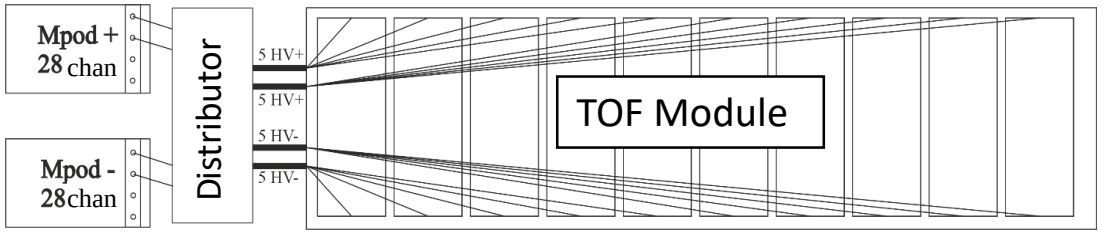

High voltage distribution scheme

New type of 5-cores HV cable with GES connectors

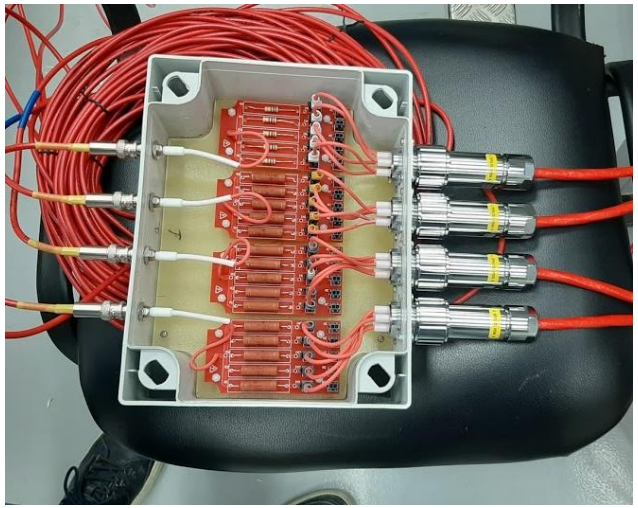

First version of the HV distributor with possibility of current measurement on each MRPC detector

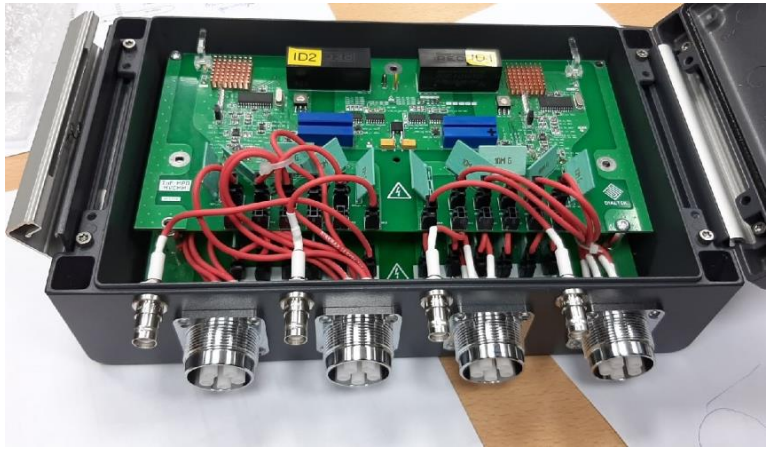

98 HV cables and 28 new distribution boxes for 28 TOF modules in production now

98 one core HV long cables with SHV connectors will be made directly in the MPD area

VME crates, HV distributors and signal cables on the yoke

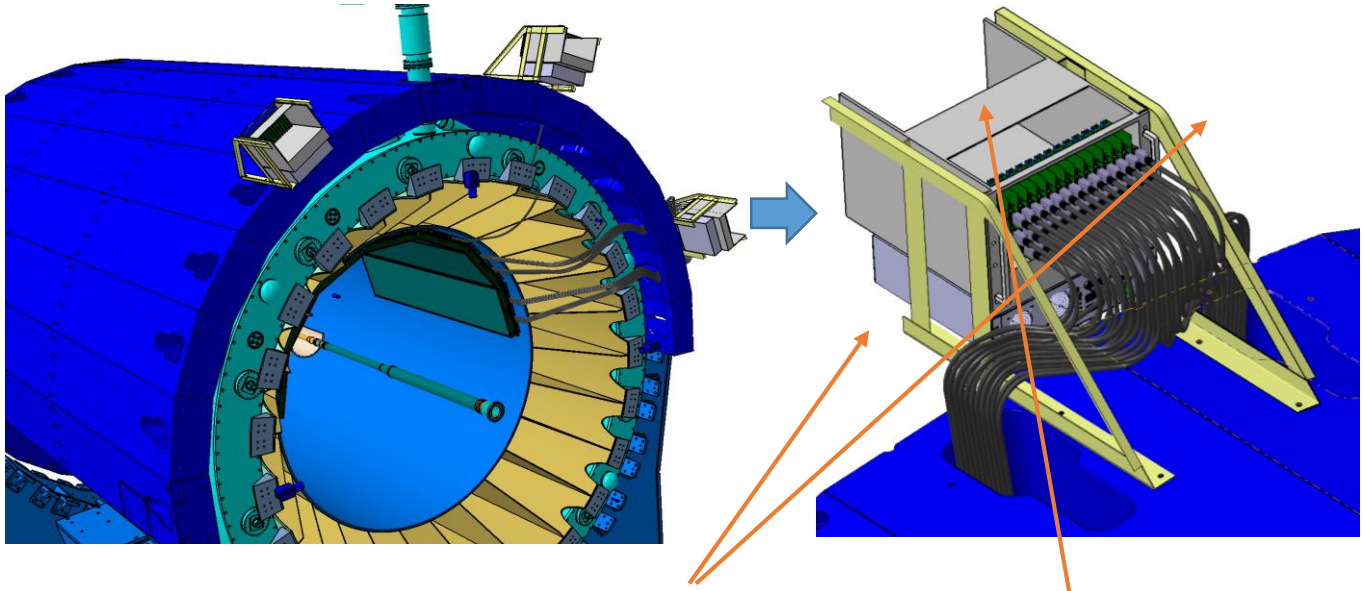

2 x HV distributors

Ethernet switch

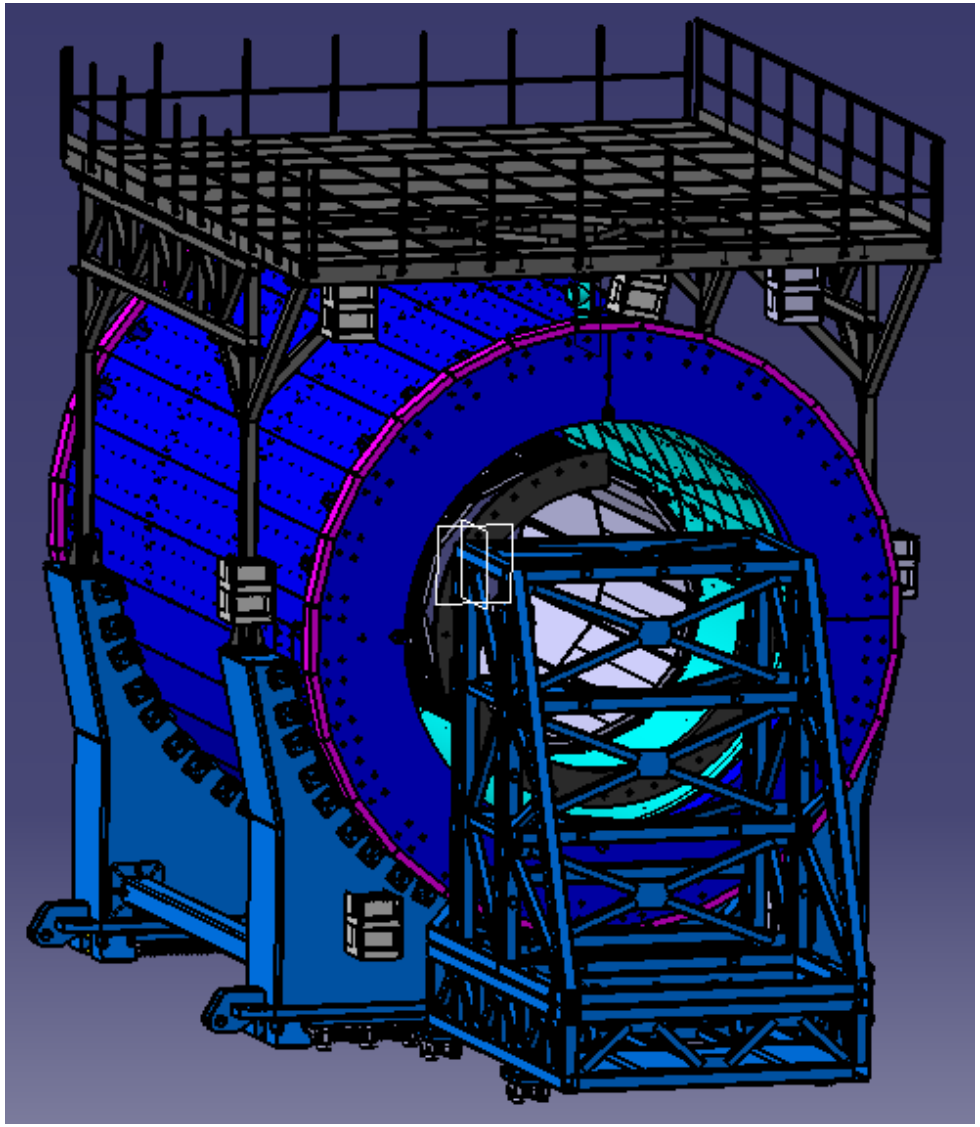

First part of integration equipment

PELCOM (Dubna)

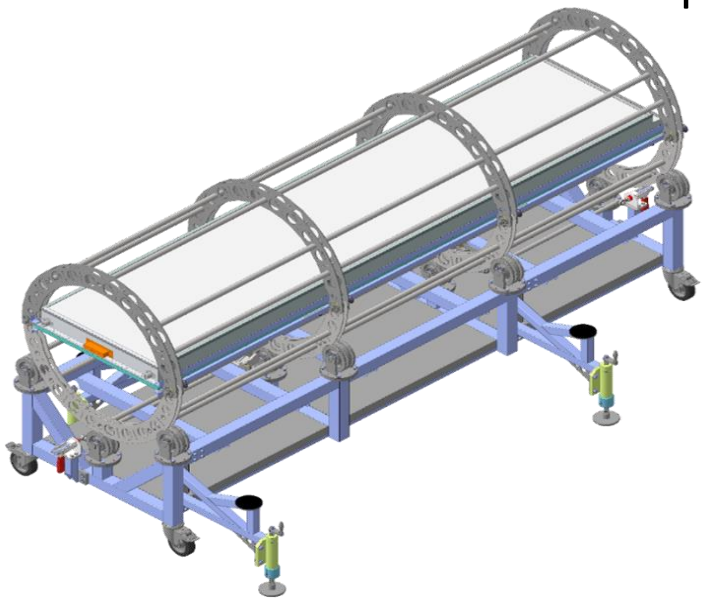

Assembly bench with rotator

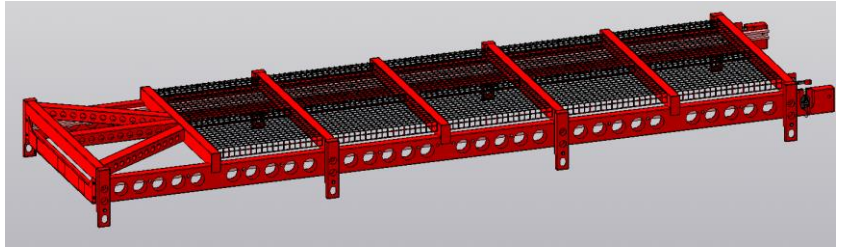

Transportation and storage cartridge

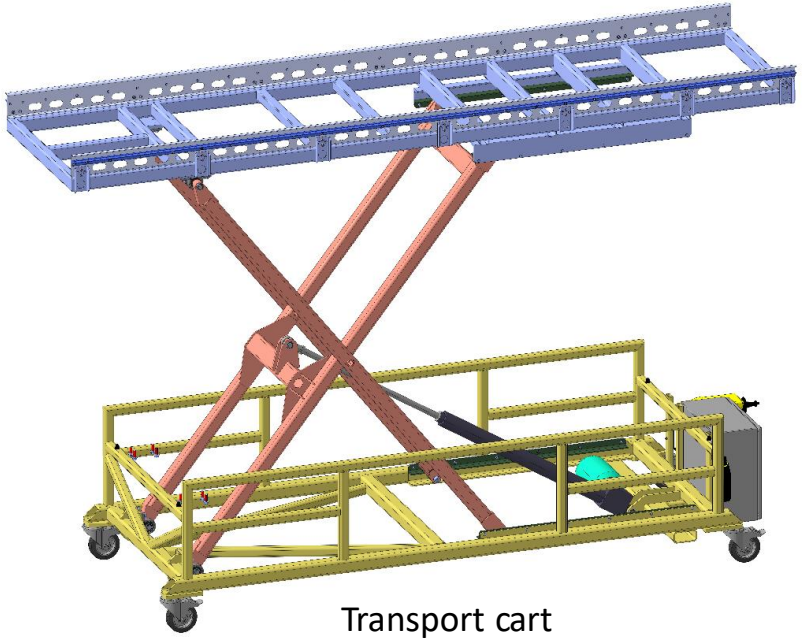

Transport cart

Equipment in the TOF assembling area (bld.42)

Equipment for installation

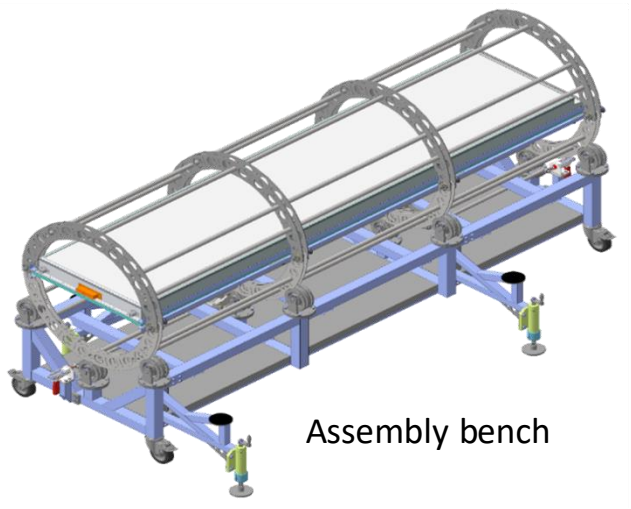

Assembly bench

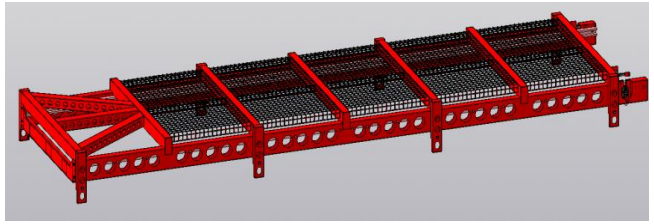

Storage cartridge for one module

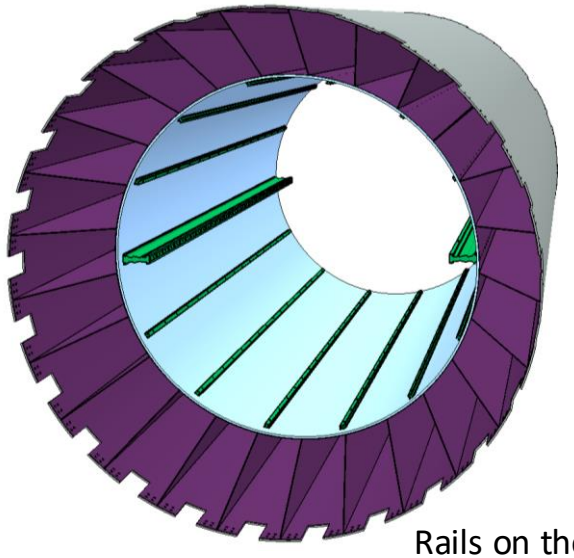

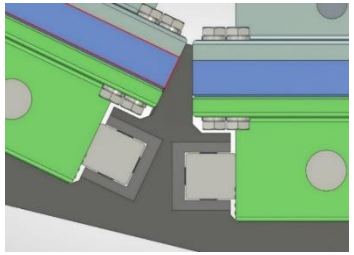

Rails on the power frame

NEW CONCEPTION

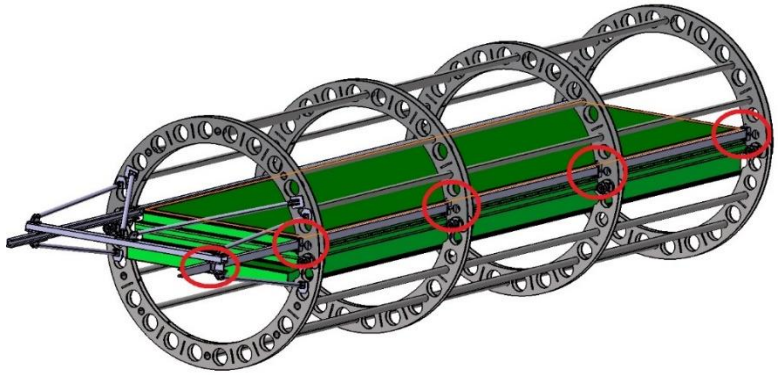

Modification of the existing assembly bench

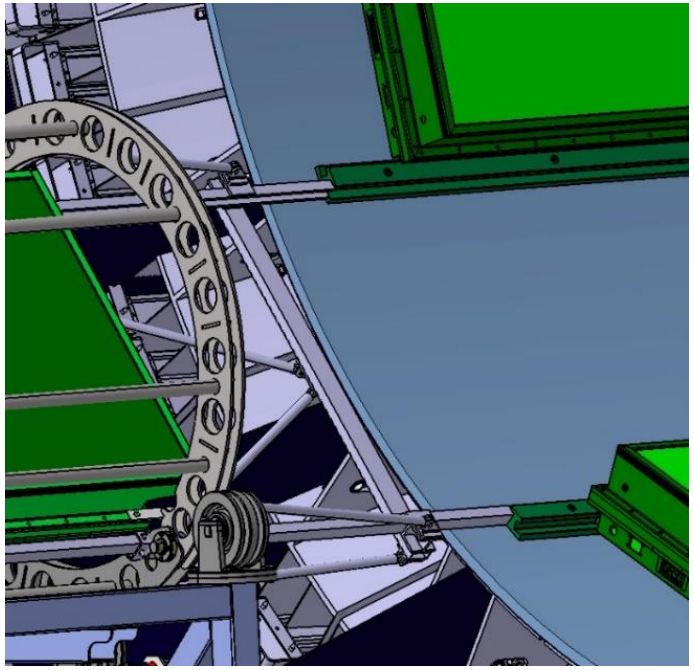

Rail extensions

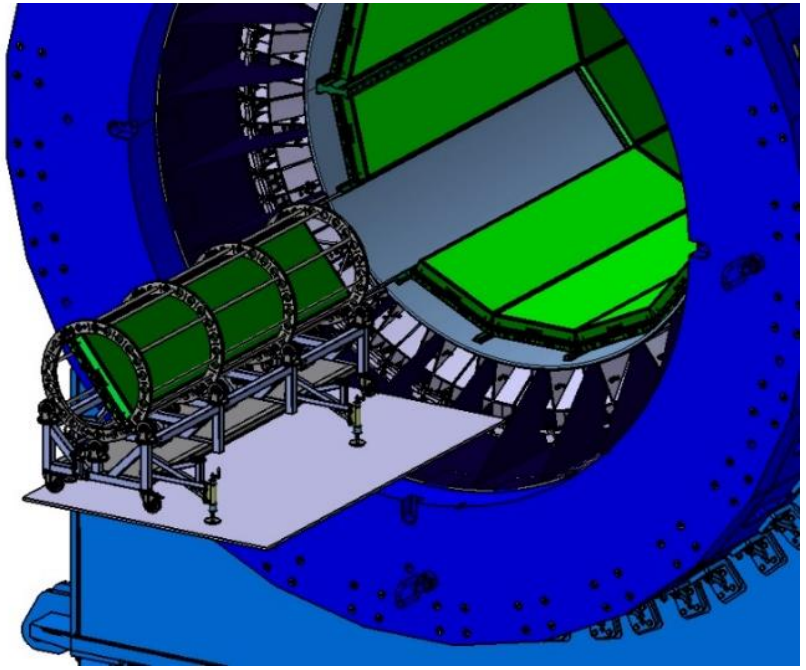

Special platform for multi-axis movement

Gas system for the TOF in the MPD

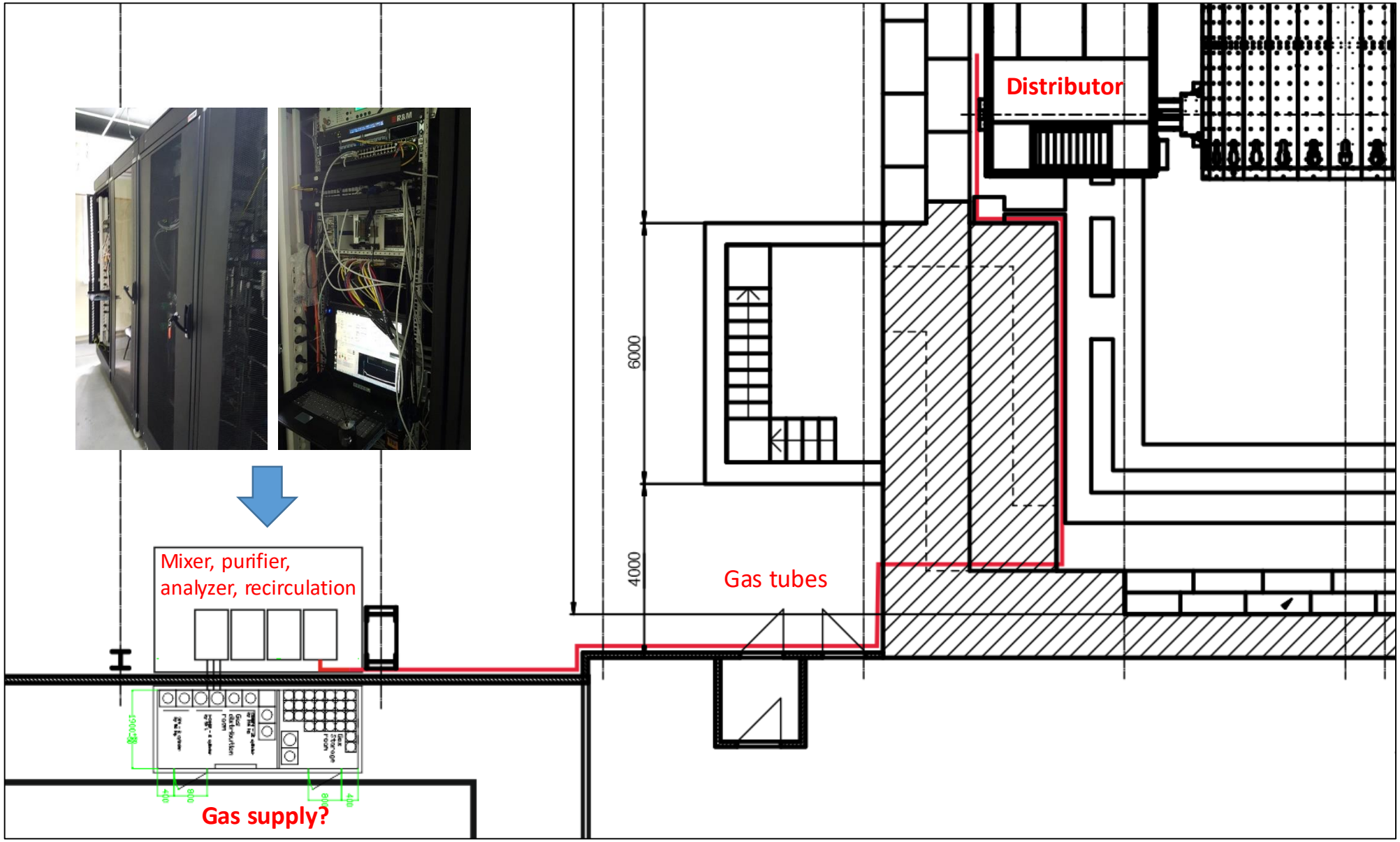

Gas system for the TOF in the MPD

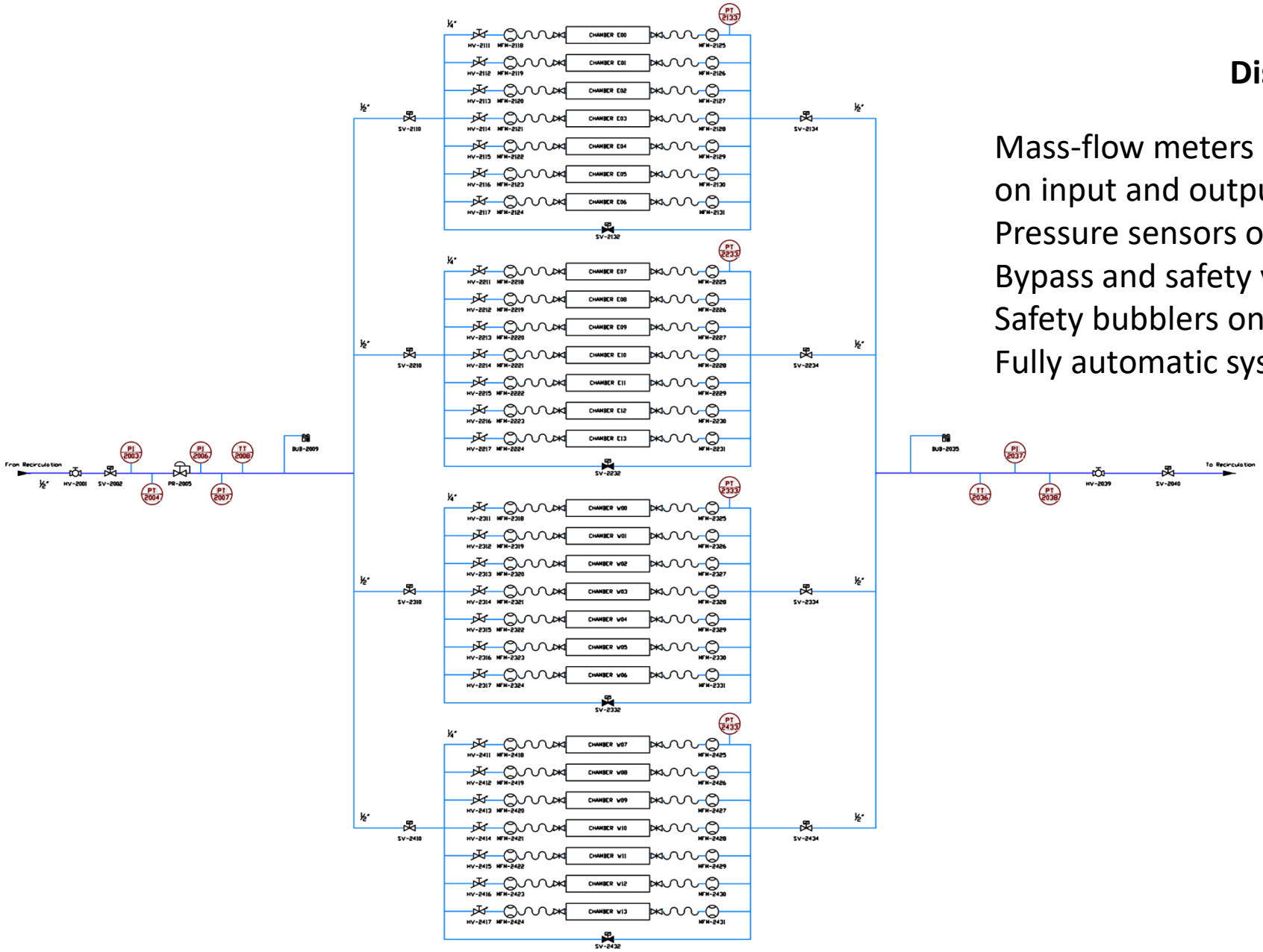

Distributor

Mass-flow meters with valve for each module on input and output (56 pcs)
Pressure sensors on each cannel
Bypass and safety valves for groups of modules
Safety bubblers on inputs and outputs
Fully automatic system

Gas supply and storage location near the MPD hall

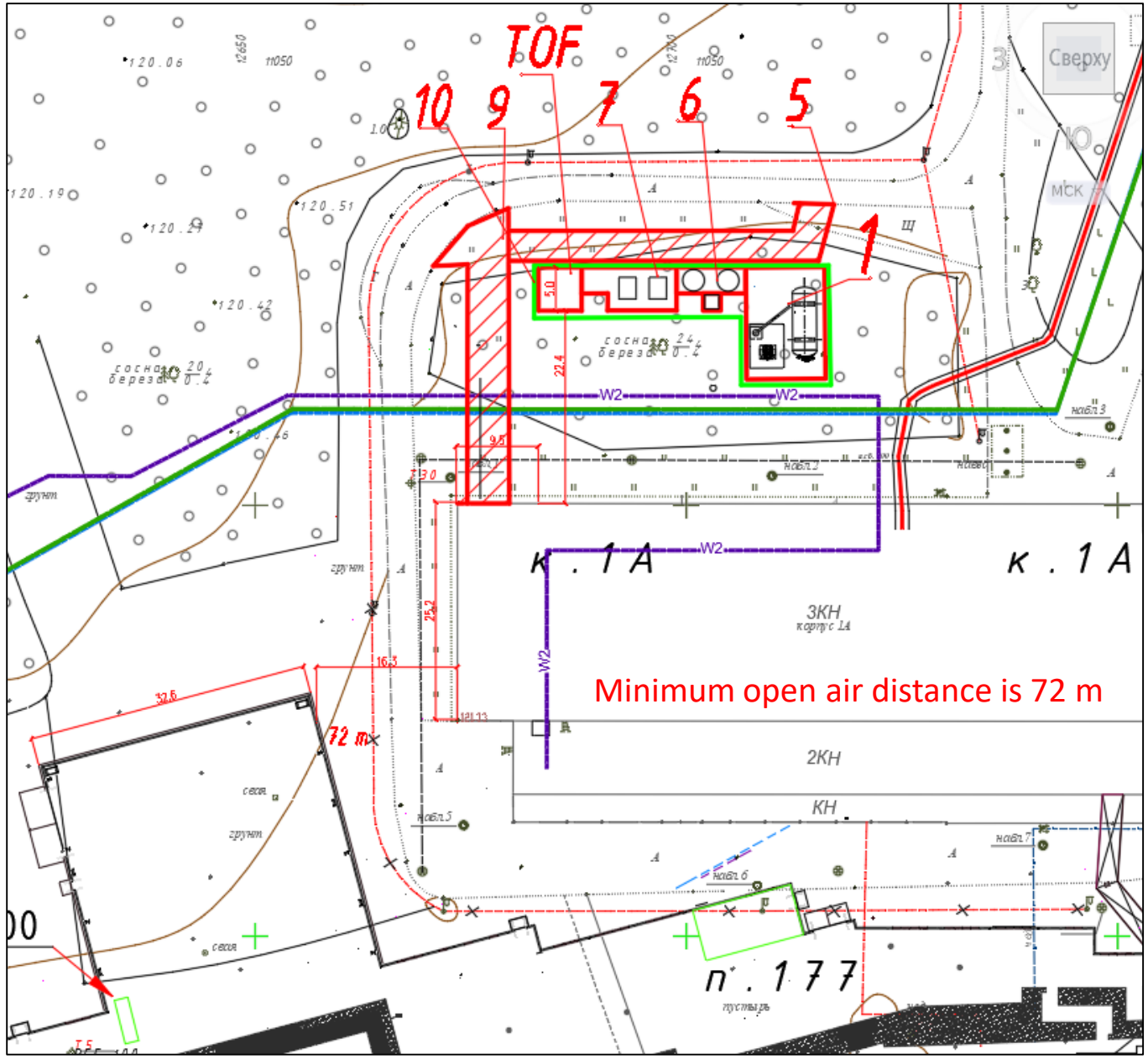

$C_2H_2F_4$ Temperature/pressure

-20,0	1,327
-19,0	1,386
-18,0	1,446
-17,0	1,508
-16,0	1,573
-15,0	1,639
-14,0	1,708
-13,0	1,779
-12,0	1,852
-11,0	1,928
-10,0	2,006
-9,0	2,086
-8,0	2,169
-7,0	2,255
-6,0	2,343
-5,0	2,433
-4,0	2,527
-3,0	2,623
-2,0	2,722
-1,0	2,823
0,0	2,928

iC_4H_{10} Temperature/pressure

-28	0.51
-26	0.56
-24	0.61
-22	0.67
-20	0.72
-18	0.79
-16	0.86
-14	0.93
-12	1.00
-10	1.08
-8	1.17
-6	1.26
-4	1.36
-2	1.46
0	1.57
2	1.68
4	1.80
6	1.93
8	2.07
10	2.21
12	2.35

Minimum pressure in the input gas pipeline

Gas area near the bld.1A:

- Only storage. Gas supply somewhere else (the best – inside the b.17).
- Full length heated piping (expensive and not safe).

Current status of production and equipment purchasing

Task	Current status	Readiness
TOF modules		
Materials for detectors	Purchased all the materials and components. The production of detectors is started at the beginning of March 2019.	**100%**
TOF module box	In stock – 22 pcs of 28. There is no information about the final delivery.	**78%**
TOF cosmic test stand	In operation.	**100%**
TOF front-end electronics	In stock – ~600 (560 needed).	**100%**
DAQ sysytem		
Signal cables	In stock – 680 pcs (560 needed).	**100%**
VME64x VXS crates	In stock – 16 pcs (14 needed).	**100%**
TDC72VHL modules	In stock – 210 pcs (v4) (196 needed).	**100%**
Gas system	Fully functional gas system for cosmic stand is in operation. Gas system for building 17 in production. Problems with gas components supply and storage.	**70%**
TOF integration	The first part of equipment in the final stage. A tender for design of the installation equipment of TOF inside MPD has been announced.	**60%**
HV & LV systems		
Mpod LV+HV power crate	In stock – 6 pcs (6 needed).	**100%**
LV modules	In stock – 16 pcs (14 needed).	**100%**
HV modules	In stock – 32 pcs (28 needed).	**100%**
HV&LV cables	All new HV and LV cables are purchased. HV distribution modules are in mass-production.	**20%**

Conclusions

1) MRPC dark current problem – almost solved
2) Integration equipment – in development
3) Signal, LV&HV cabling – in production
4) VME crates, switches, and HV distributors on the MPD yoke – open question
5) Gas supply and storage for the gas system in building 17 – open question

Thank you for the attention!