Status of MCORD detector

by Polish consortium NICA-PL

MPD Collaboration Meeting, 28-30. Oct. 2020

NARODOWE CENTRUM BADAŃ JĄDROWYCH ŚWIERK

Uniwersytet Jana Kochanowskiego w Kielcach

POLITECHNIKA WARSZAWSKA WARSAW UNIVERSITY OF TECHNOLOGY

JINR

Outline

1. Introduction
2. Detector
3. Electronics
4. Laboratory tests
5. MCORD demonstrator
6. Simulations
7. Mechanical construction
8. Summary

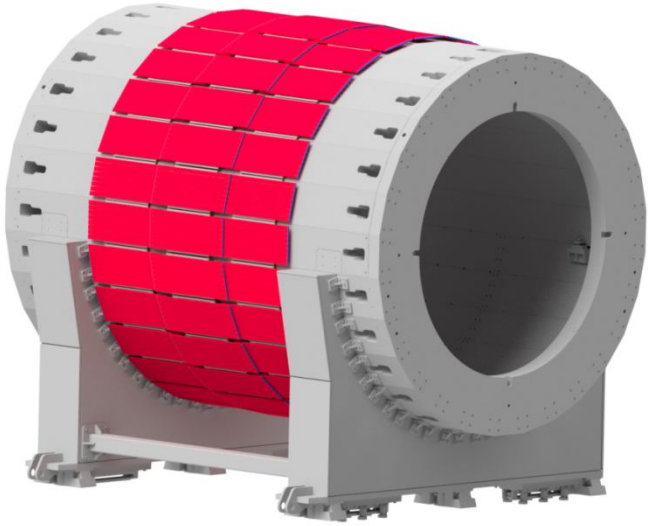

1. Introduction

MCORD applications for MPD

1. Trigger for cosmic muons for:
   - laboratory tests of MPD subsystems (2 separate MCORD sections)
   - MPD off-beam calibration in service position (6 MCORD modules) (E > 1.6 GeV)
2. Muon identifier (E > 0.8 GeV) for:
   - pions and kaons decays
   - rare mesons decays (η, ρ)
3. Astrophysics (muon showers and bundles)
   - identification of extremely high energy particle sources
   - sensitivity for horizontal events
4. Modular construction – easy upgrade and/or alternative use

1. Introduction

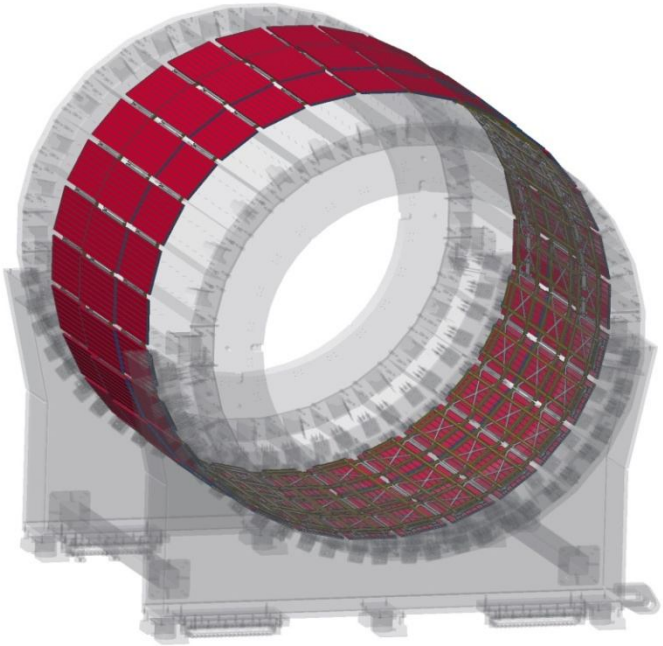

MCORD modules on MPD surface

Number of modules: 28
(3 sections x 8 scintillators)

Module size:
4784 x 735 x 140 mm

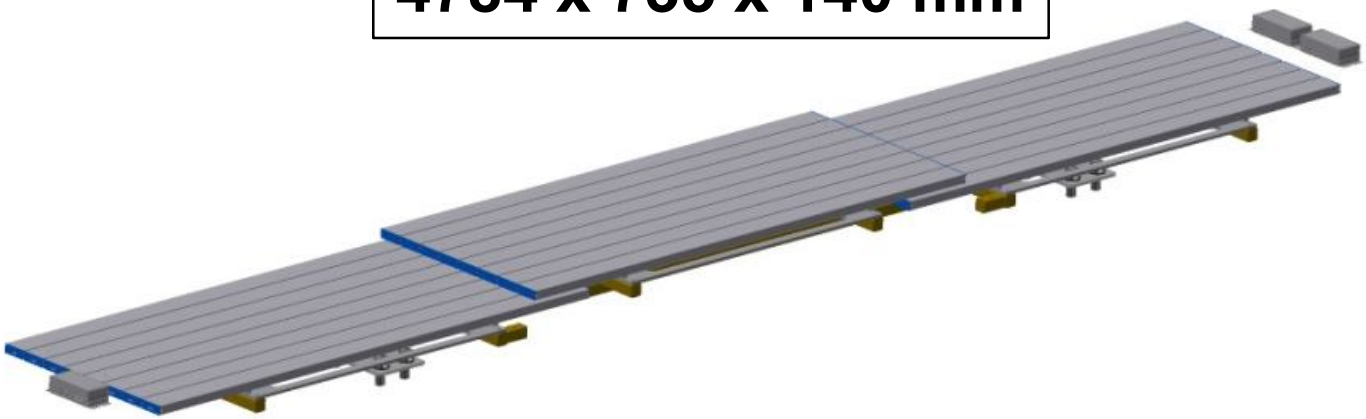

2. Detector

Project of the mechanical connection scintillator-SiPM-fiber-AFE board

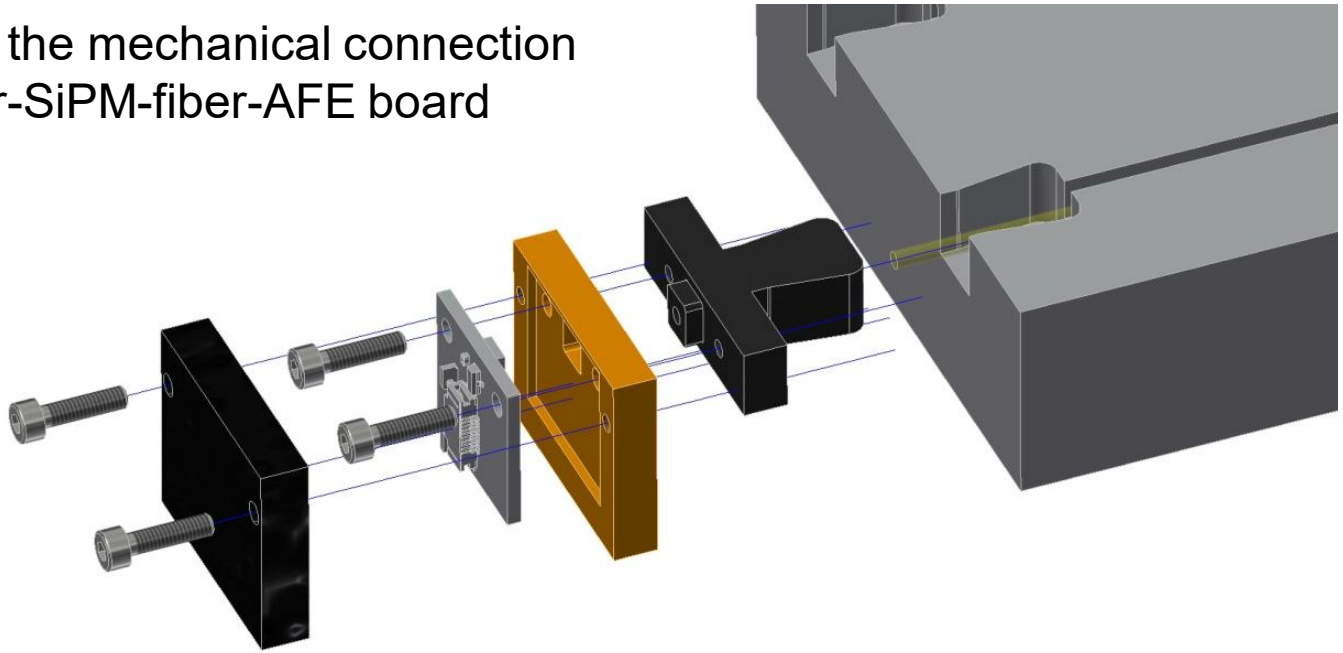

Plastic scintillator:	polystyrene (Nuvia)
	162 x 7.2 x 2.2 cm
WLS fiber:	1 mm dia. (Kuraray)
SiPM (MPPC):	3x3 mm^2 (Hamamatsu)
Housing:	aluminum profile
	174 x 8 x 3 cm

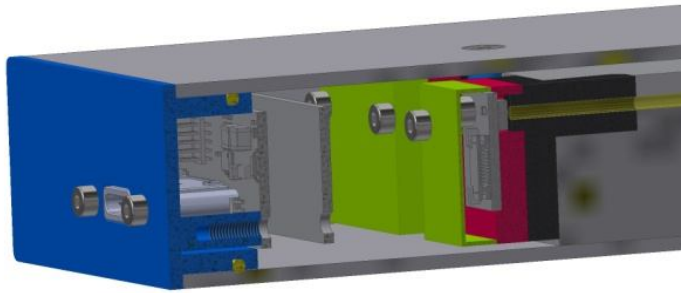

3. Electronics

Analog front-end (AFE): **custom design (WUT)**

Digital electronics (DSP): **custom design (WUT)**

Data acquisition (DAQ): **MicroTCA**

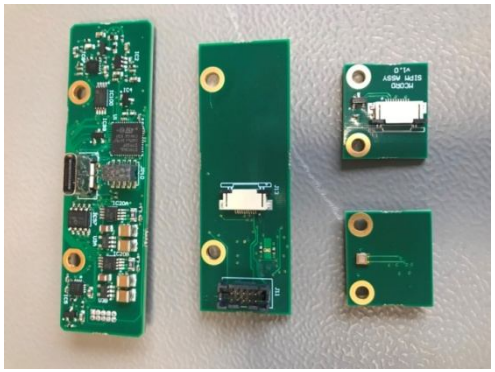

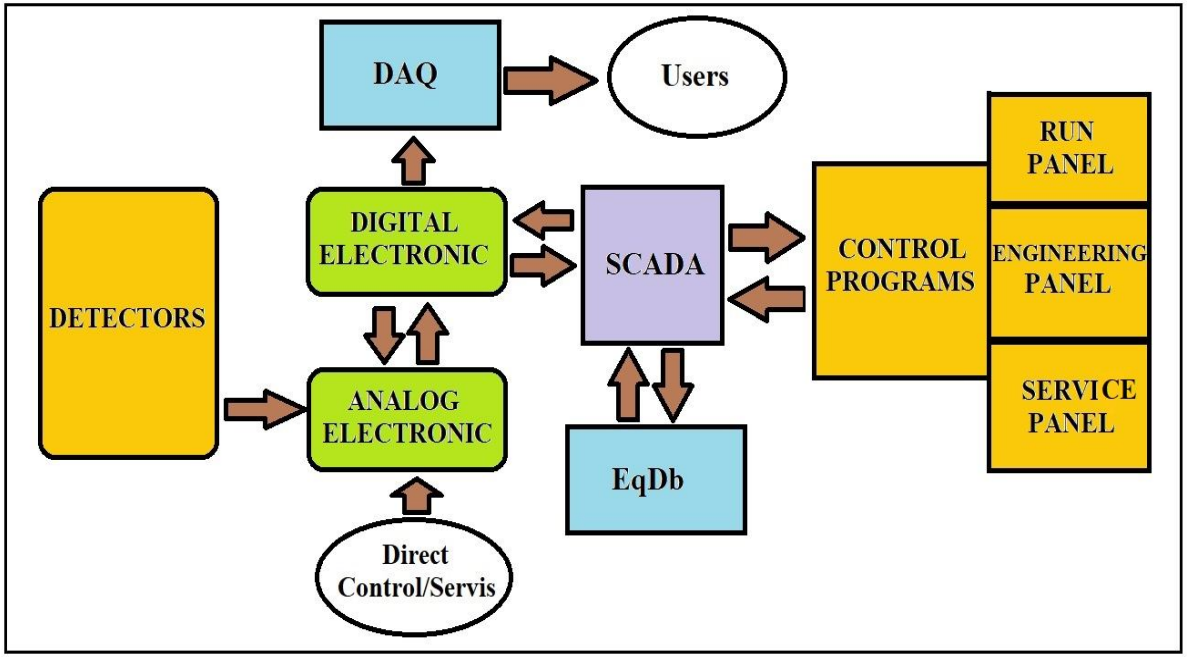

4. Laboratory tests

Plastic detector + 2 plastic hodoscopes (muon triggers)
DAQ: CAEN DT5730

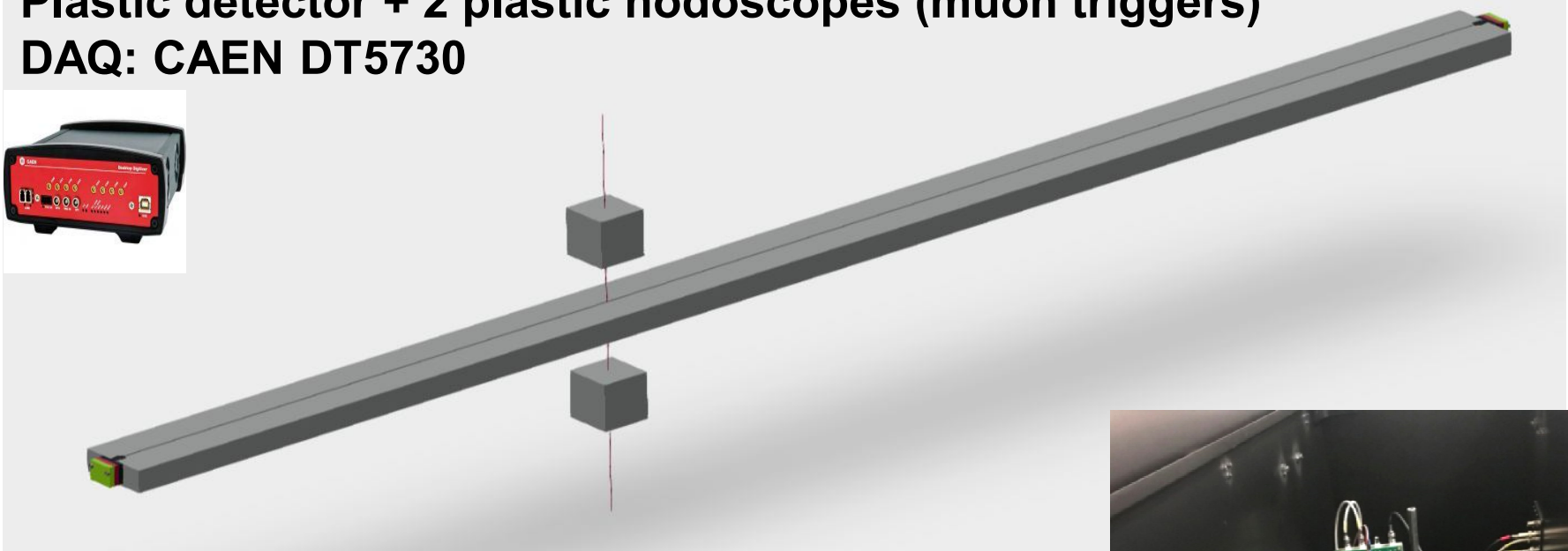

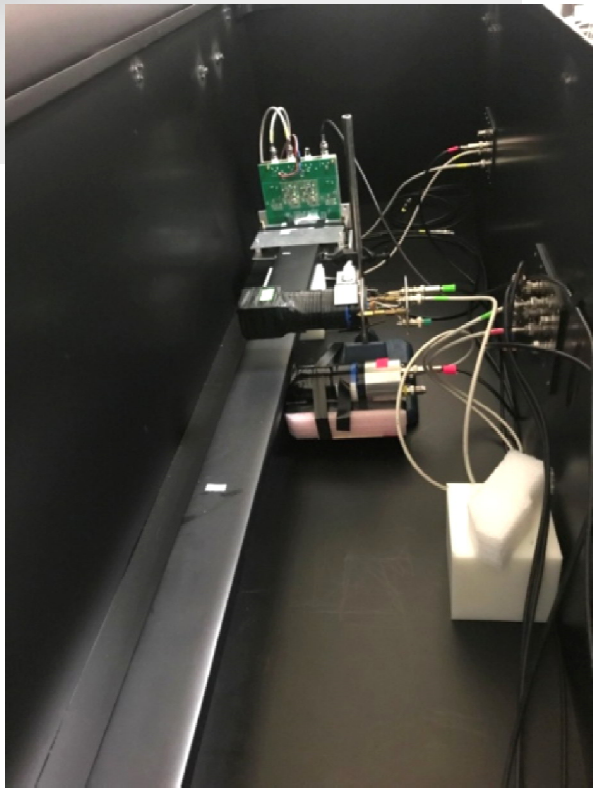

4. Laboratory tests

Plastic (150 x 7.2 x 2.2 cm) + WLS fiber (1 mm)
MPPC 3 x 3 mm (pixel size 75um)

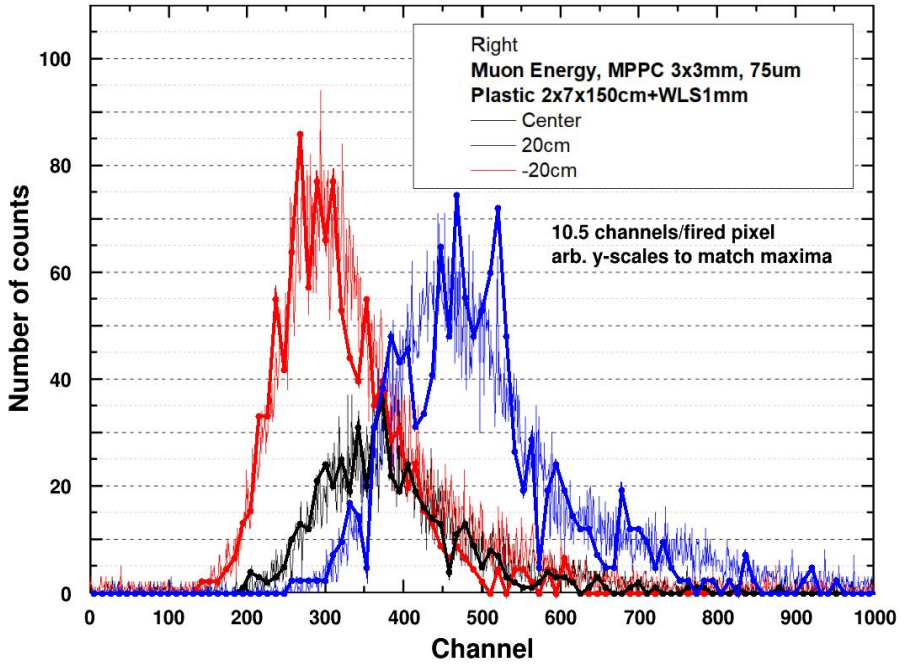

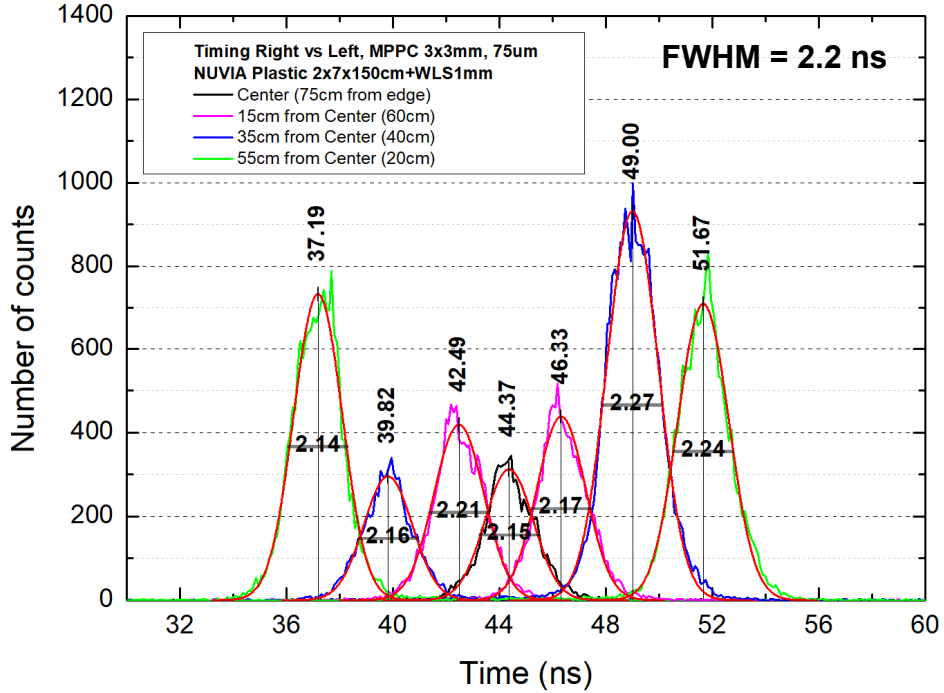

Number of detected photons = 30

CRT (σ) = 0.93 ns ===> σ_x = 7.1 cm

(still some room for improvement)

5. MCORD demonstrator

2 sections (2 x 8 scintillators) + AFE + DSP + DAQ,
under construction until the end of 2020.

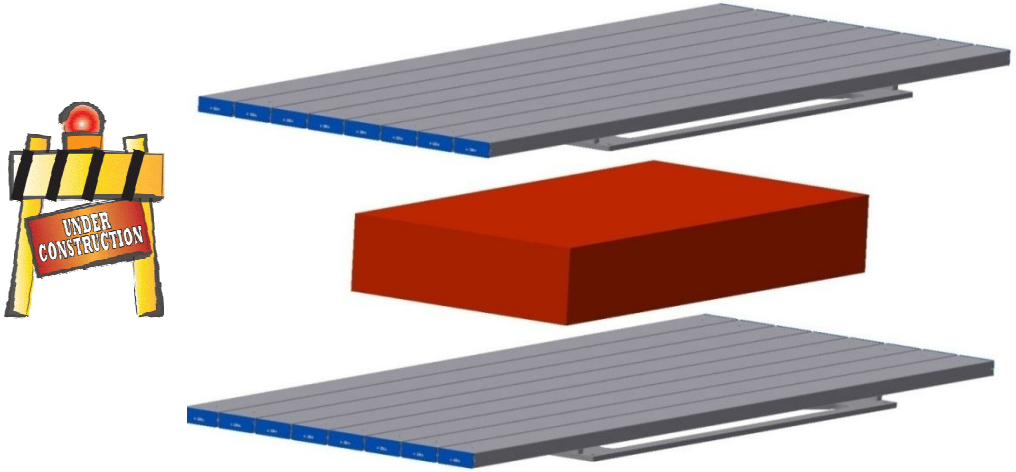

Single section
1744x735(675)x50

! Feasible for laboratory tests of MPD subsystems !

6. Simulations (EAS)

Angular distributions of Extensive Air Shower (EAS) components, calculated for location near Dubna city (at sea level).

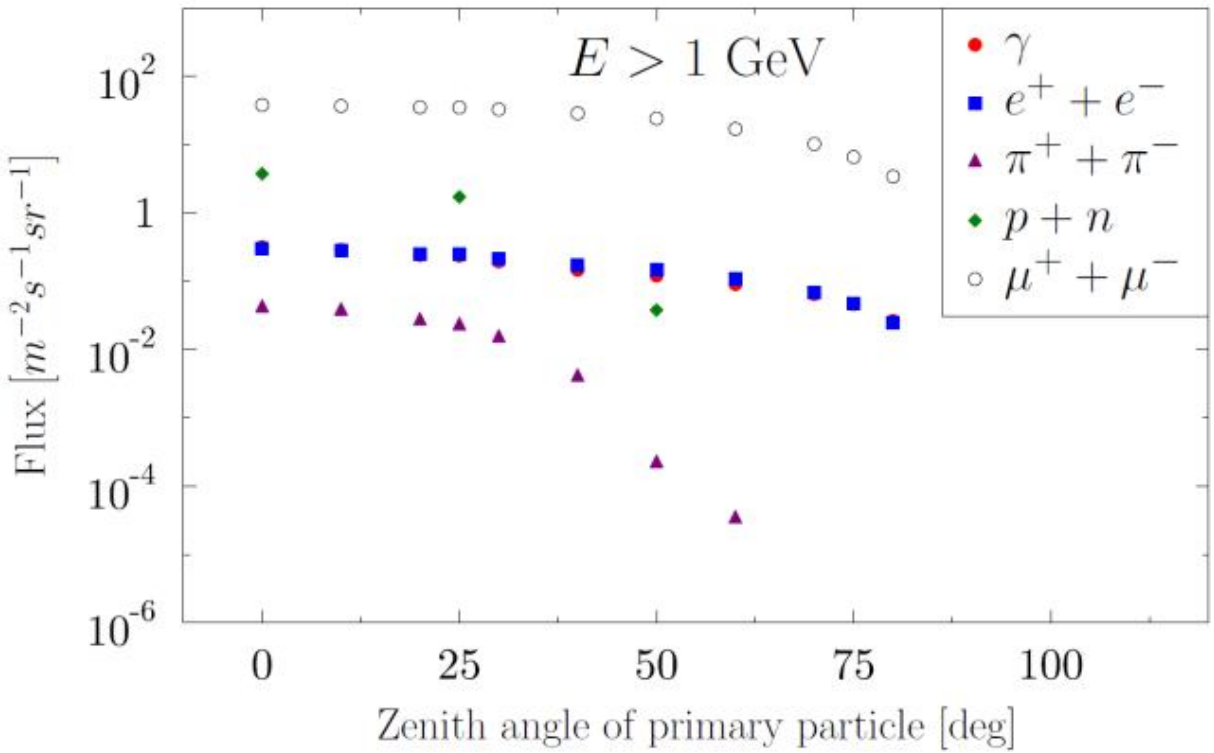

CORSIKA 7.74 code simulation
(model QGSJETII-04 + UrQMD).

6. Simulations (EAS)

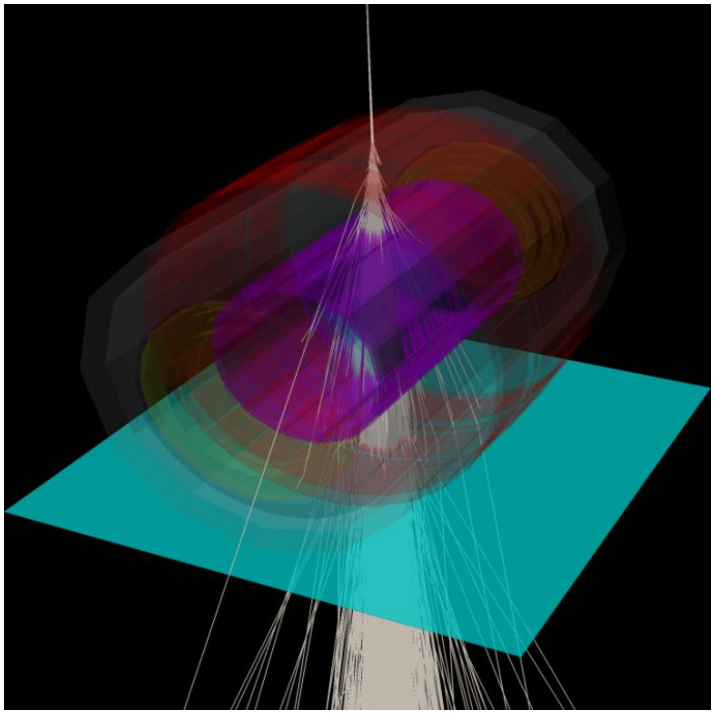

Propagation of cosmic muons through the MPD - rescattering angel

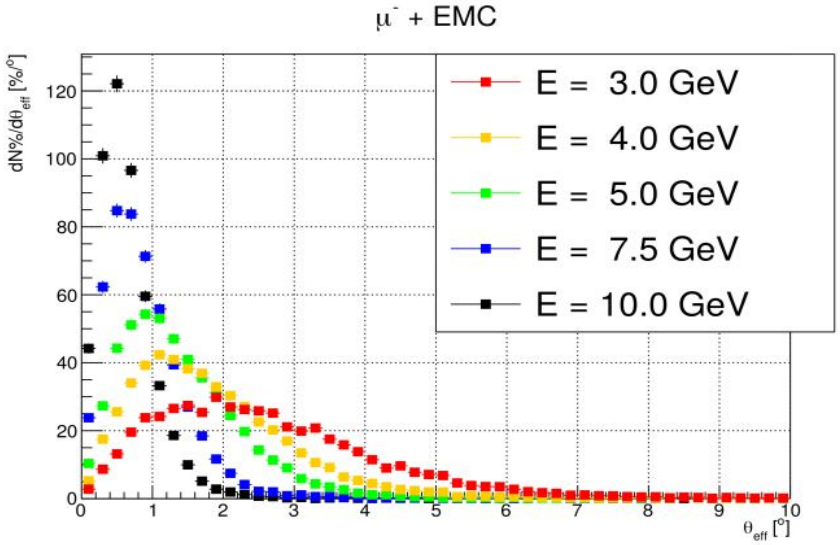

	$<\theta_{eff}>$	
μ Energy[GeV]	with ECal	without Ecal
3	**2.68**	**2.24**
4	**1.85**	**1.65**
5	**1.41**	**1.31**
7.5	**0.91**	**0.87**
10	**0.65**	**0.63**

	For TPC (D=281cm) $<R_{max}>$	
μ Energy[GeV]	with ECal [cm]	without ECal [cm]
3	**12.78**	**11.00**
4	**9.07**	**8.07**
5	**6.93**	**6.43**
7.5	**4.44**	**4.25**
10	**3.21**	**3.12**

6. Simulations (EAS)

Propagation of cosmic muons through the MPD

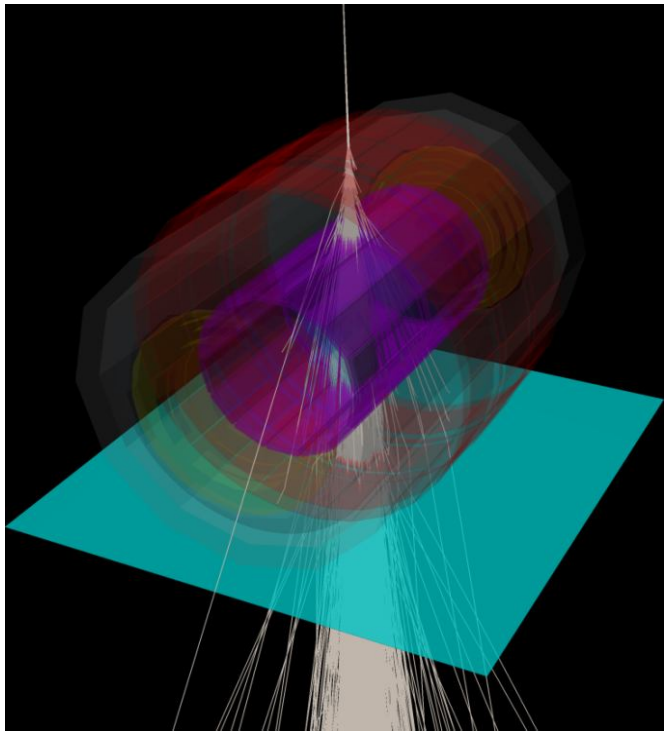

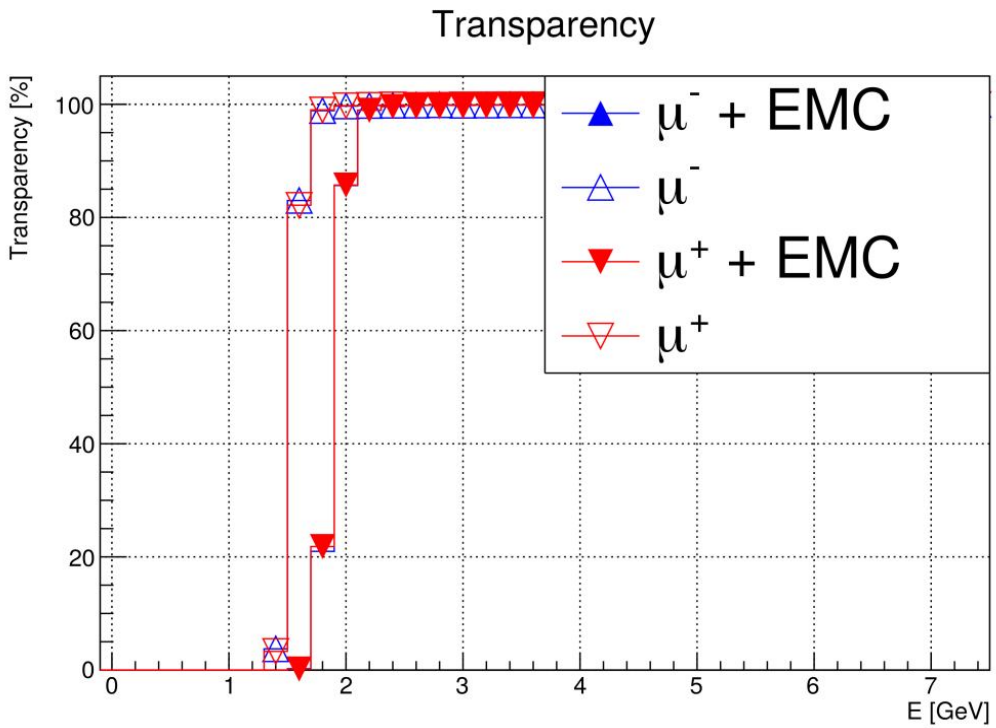

Energy threshold for muons able to pass through the MPD:
with ECal assembled: **2.0 GeV/c²**
without ECal assembled: **1.6 GeV/c²**

6. Simulations (EAS)

Cofluxim – cosmic ray generator

for MPD subsystems calibration study

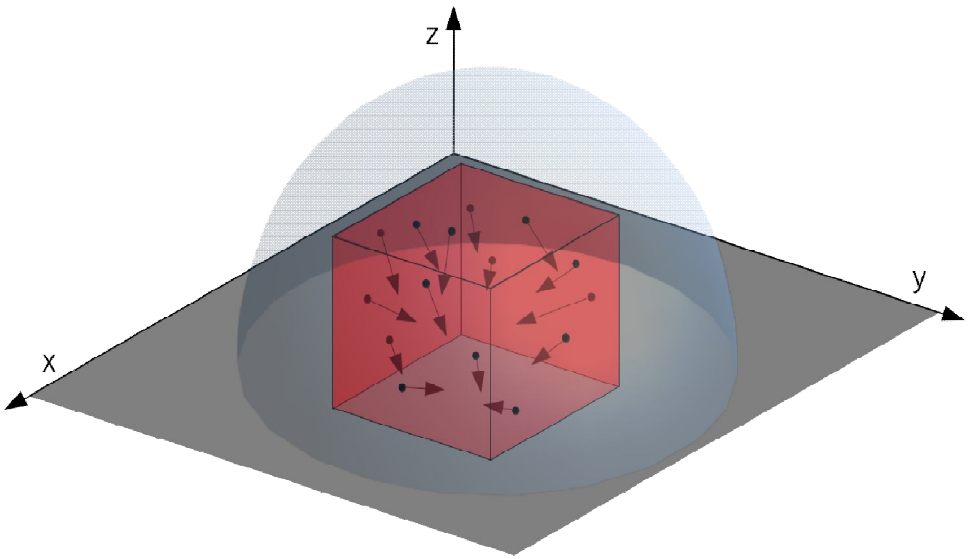

The concept of particle generation: drawing particles on the generation cube walls.

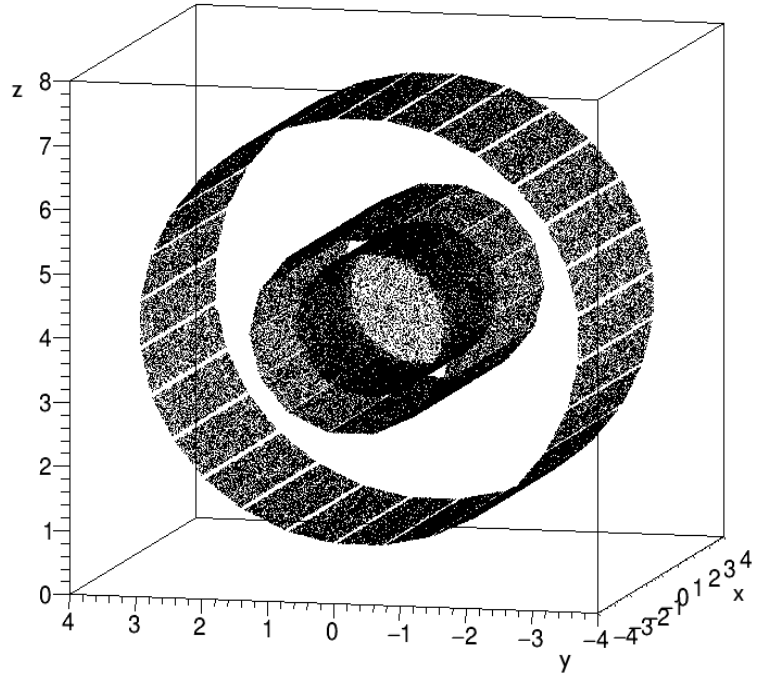

Plot of all hits on the surfaces of TPC, ToF and MCORD detectors.

6. Simulations (EAS)

TPC calibration using MCORD triggers

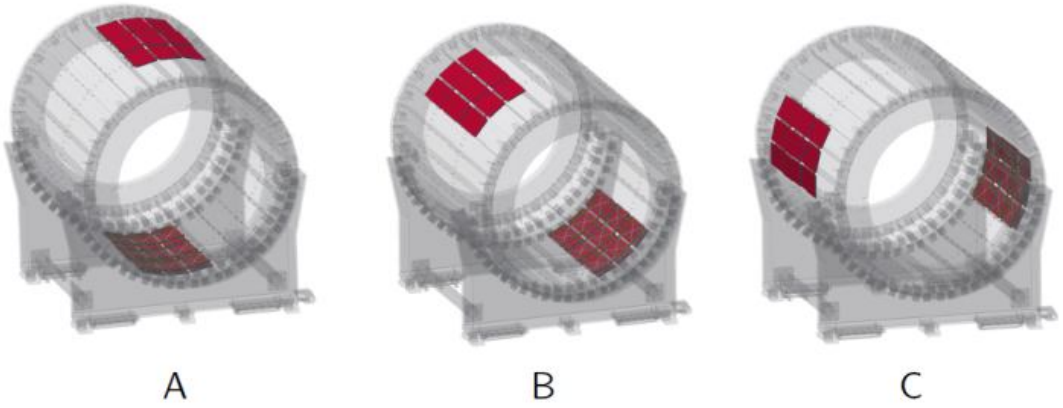

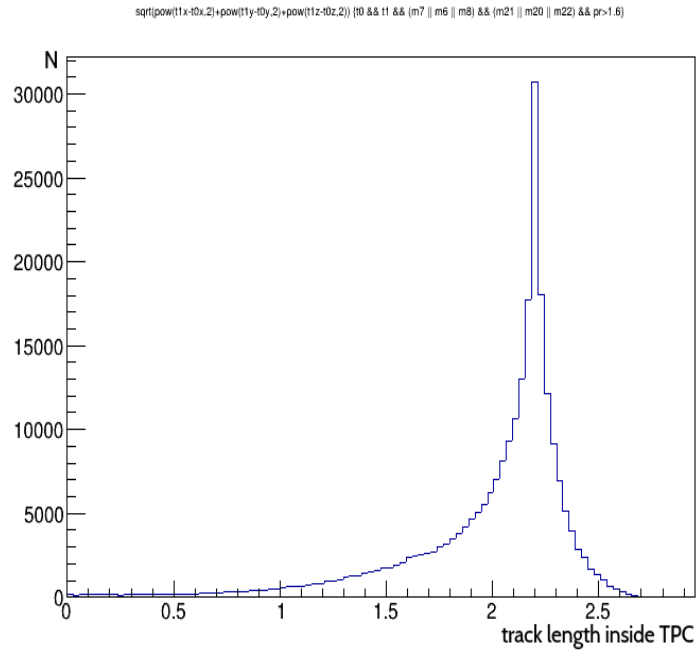

Calculated for muons with momentum
p > 1.6 GeV/c.

MCORD configuration	MCORD modules ID numbers	MCORD & TPC (tracks per hour)
A	(6 or 7 or 8) and (20 or 21 or 22)	**246 800**
B	(9 or 10 or 11) and (23 or 24 or 25)	**158 262**
C	(12 or 13 or 14) and (26 or 27 or 0)	**20 634**

6. Simulations (EAS)

TPC calibration using MCORD triggers

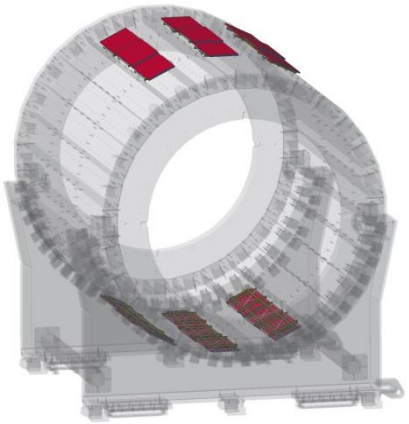

D

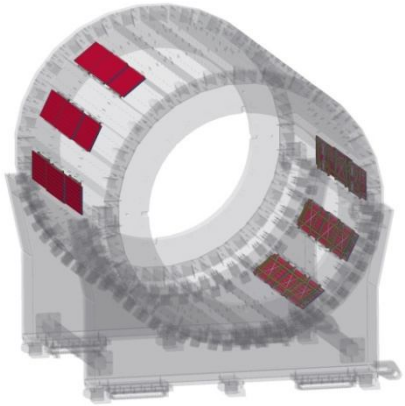

E

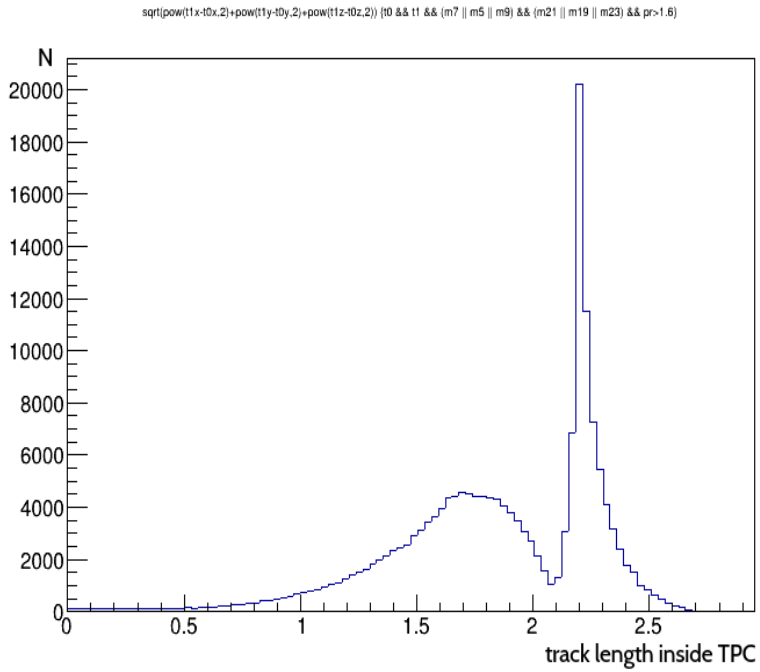

Calculated for muons with momentum
p > 1.6 GeV/c.

MCORD configuration	MCORD modules (ID numbers)	MCORD & TPC (tracks per hour)
D	(5 or 7 or 9) and (19 or 21 or 23)	**178 822**
E	(10 or 12 or 14) and (24 or 26 or 0)	**50 894**

6. Simulations (EAS)

TPC and ToF calibration using MCORD triggers

MCORD configuration	MCORD modules (ID numbers)	ToF modules (ID numbers)	MCORD & ToF (tracks per hour)	MCORD & ToF & TPC (tracks per hour)
F	(6 or 7 or 8) and (20 or 21 or 22)	3 and 10	43493	**39 768**
G	(4 or 5 or 6) and (18 or 19 or 20)	2 and 9	35554	**32 958**
H	(2 or 3 or 4) and (16 or 17 or 18)	1 and 8	17516	**16 254**
I	(0 or 1 or 2) and (14 or 15 or 16)	0 and 7	3143	**2 932**

Calculated for muons with momentum
p > 1.6 GeV/c

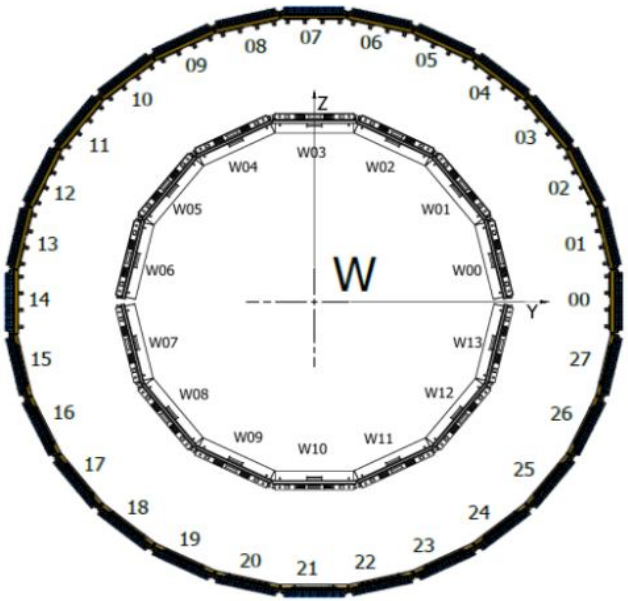

6. Simulations (EAS)

TPC and ToF calibration using MCORD triggers

MCORD configuration	MCORD modules (ID numbers)	ToF modules (ID numbers)	MCORD & ToF (tracks per hour)	MCORD & ToF & TPC (tracks per hour)
F	(6 or 7 or 8) and (20 or 21 or 22)	3 and 10	6648	**6 069**
G	(4 or 5 or 6) and (18 or 19 or 20)	2 and 9	5590	**5 196**
H	(2 or 3 or 4) and (16 or 17 or 18)	1 and 8	2713	**2 503**
I	(0 or 1 or 2) and (14 or 15 or 16)	0 and 7	480	**445**

Calculated for muons with momentum

p > 10 GeV/c

(minimum of rescattering angel)

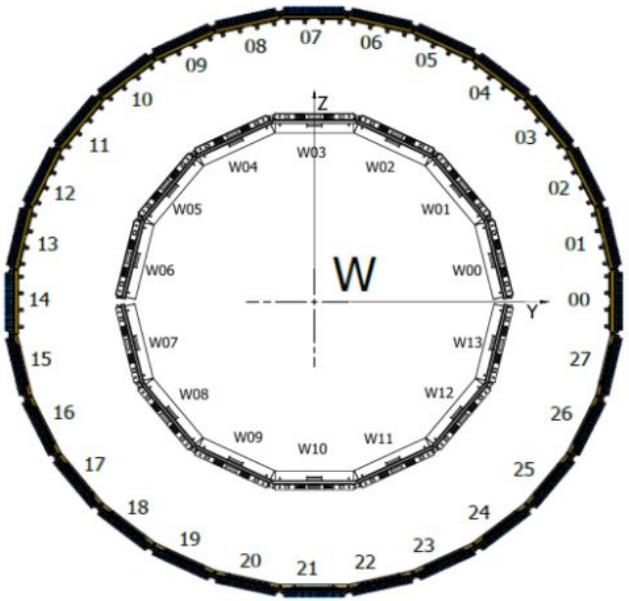

6. Simulations (Collisions)

Muons and pions distribution from ion-ion collisions inside the MPD.

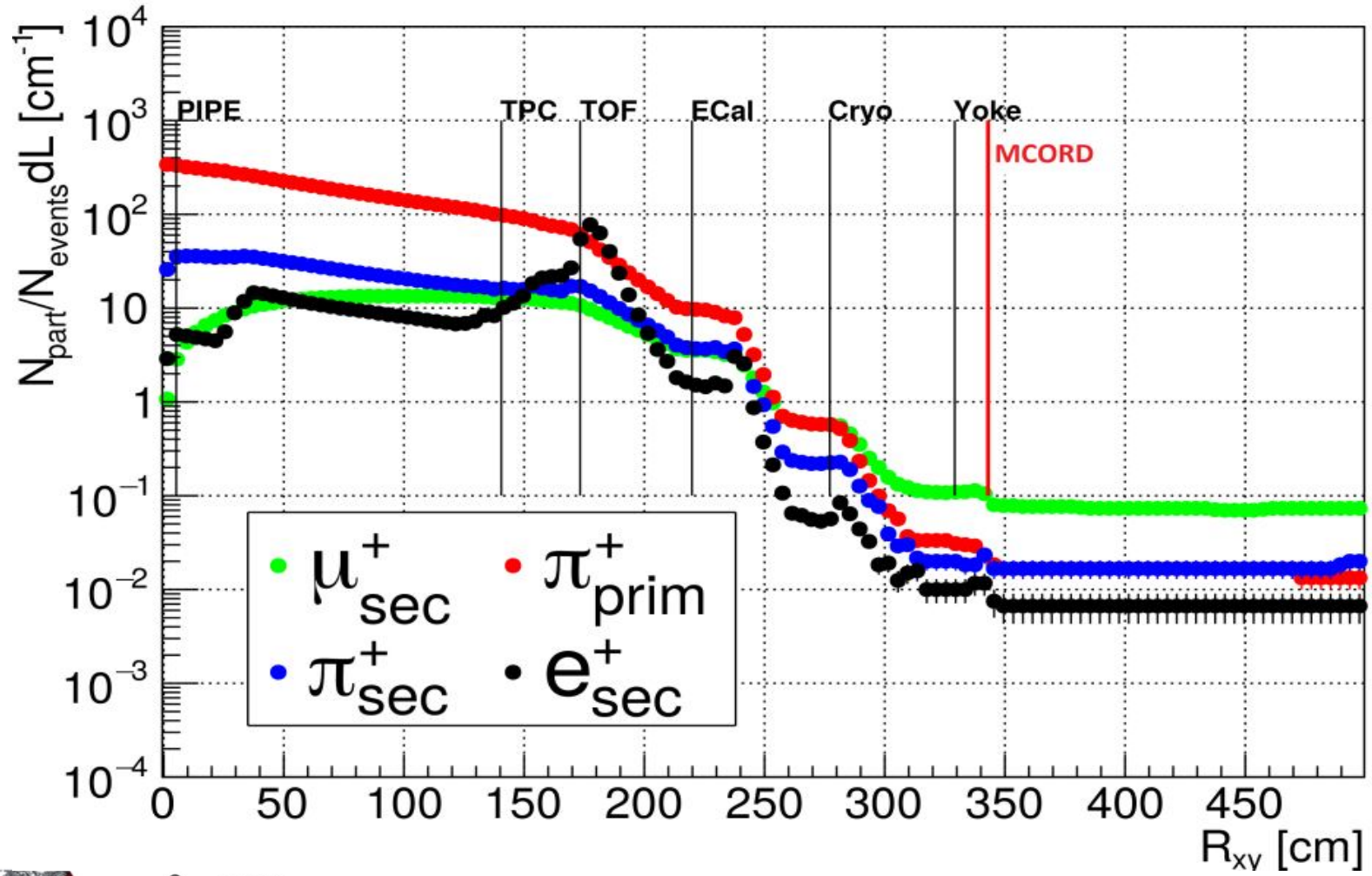

6. Simulations (Collisions)

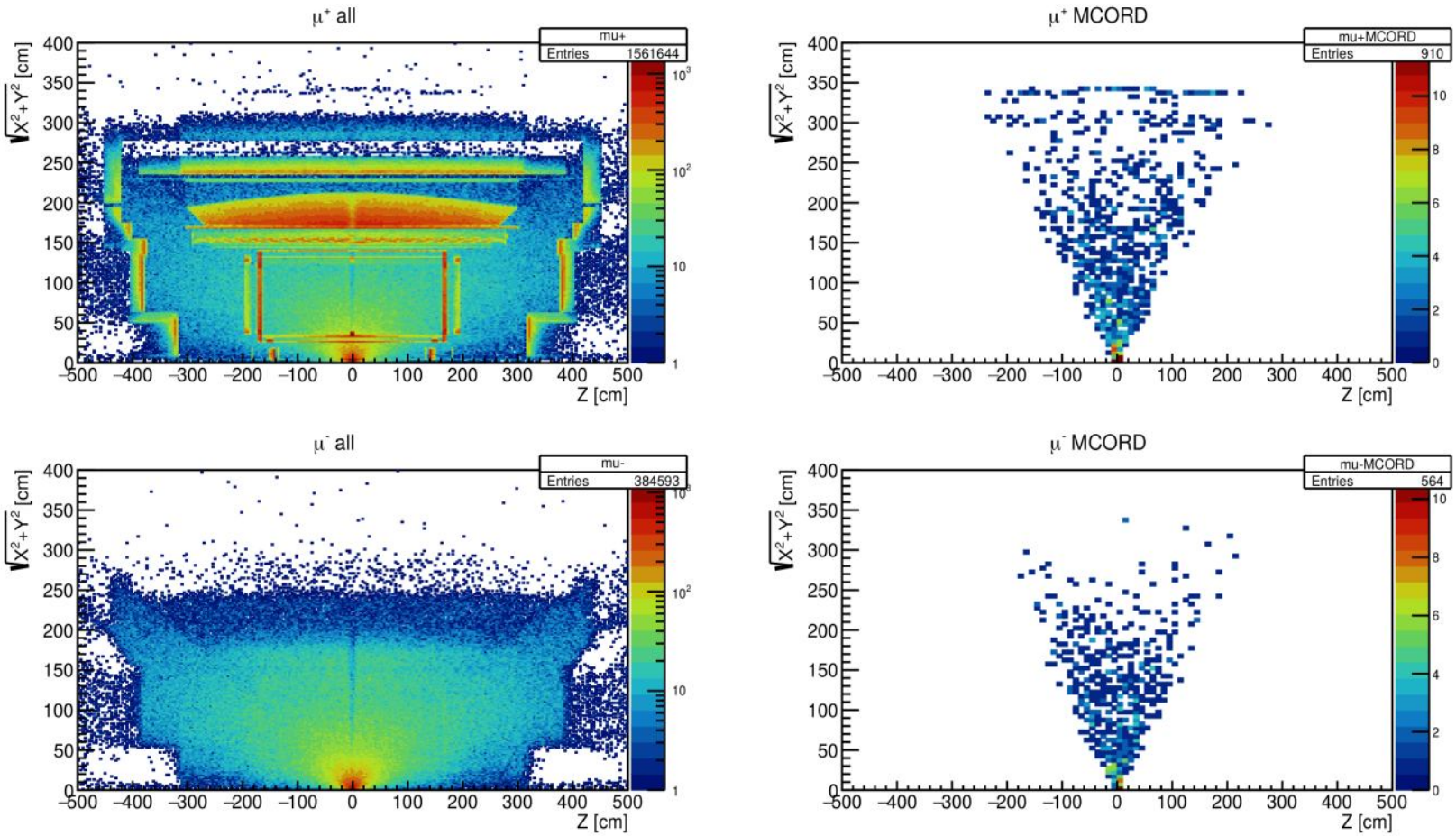

The points of creation of negative and positive muons.

Top plots corresponds to μ^+ whereas μ^- are at the bottom. Left plots represents points of creations any muon whereas right plots shows points of creations muons that can be detected by MCORD. The structure of detector (contribution from decays of "stationary" particles) is clearly visible for positive muons.

7. Mechanical construction

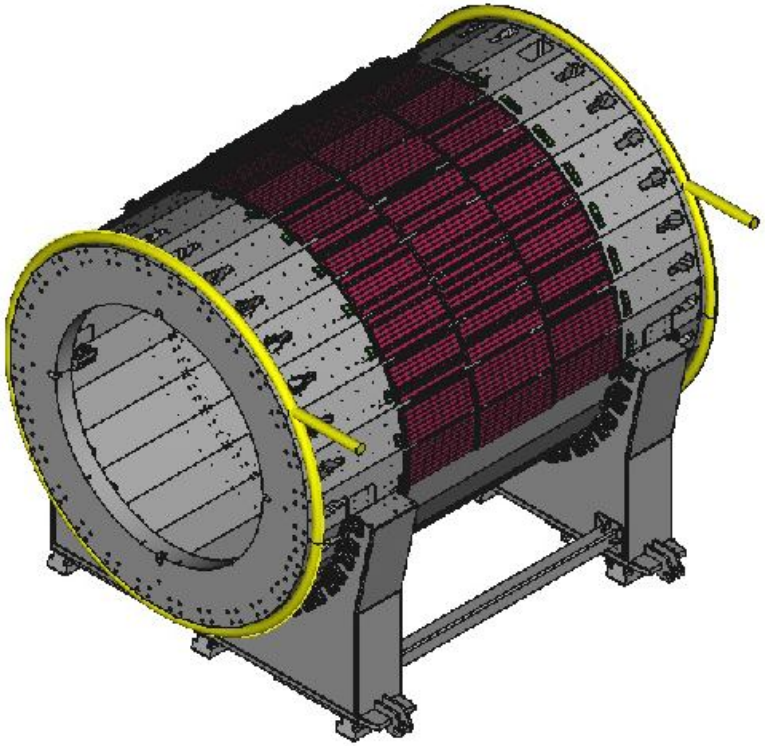

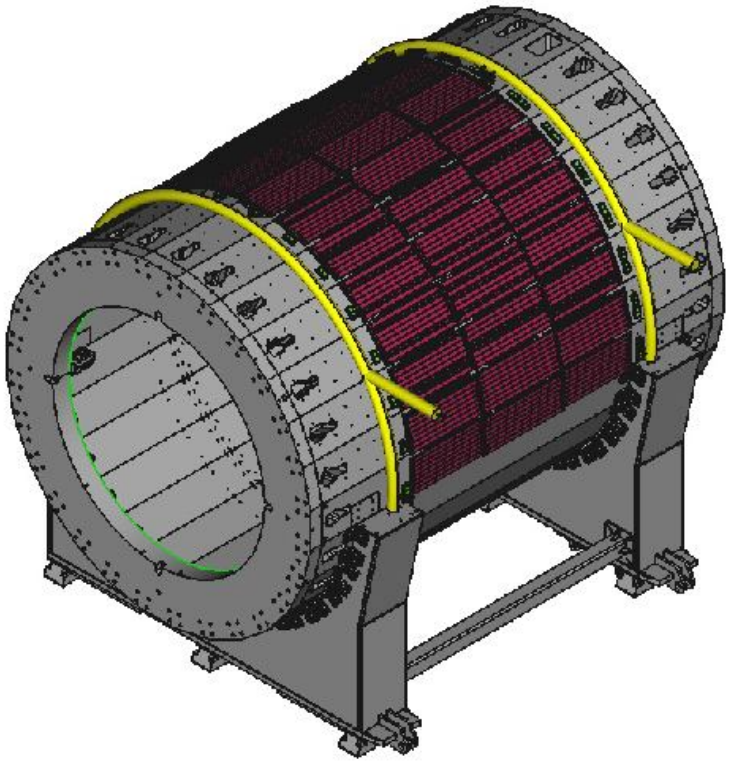

Cable routes from the MCORD to the NICA-MPD-PLATFORM.
Left: along with other cables. On the right: a separate dedicated channel.
We chose this one

7. Mechanical construction

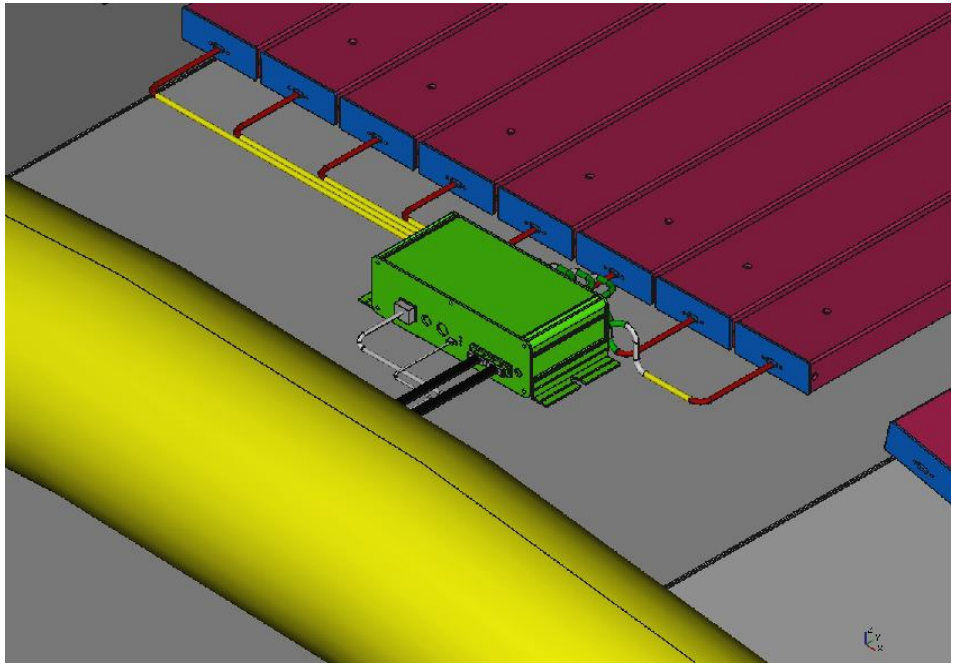

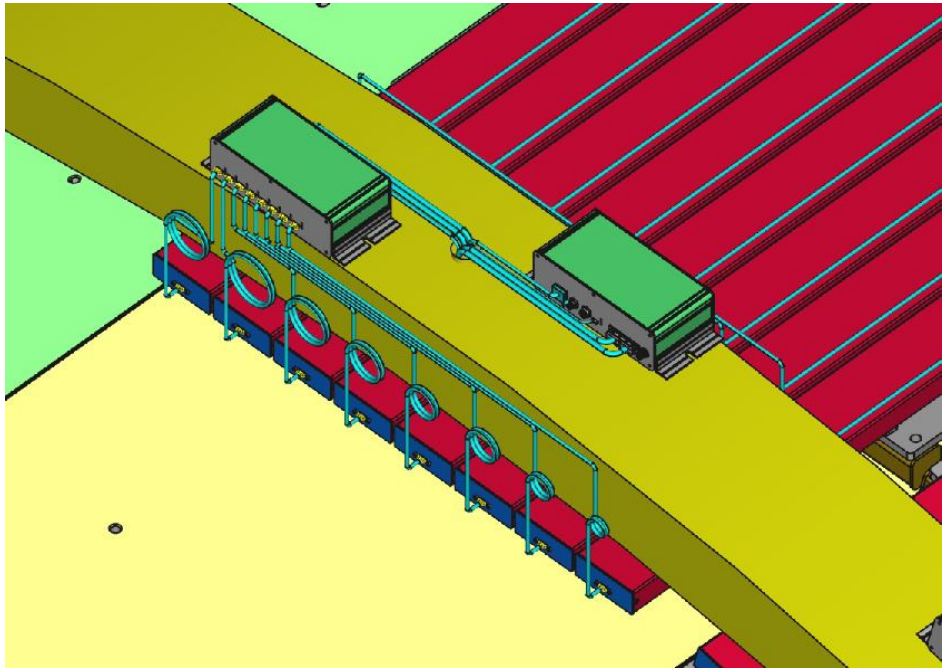

MCORD module, HUB, and cables system on the MPD surface.

Cable channels and HUBs are located next to the MCORD modules.

Cable channels and HUBs are located on MCORD modules.

We chose an intermediate solution.

7. Mechanical construction

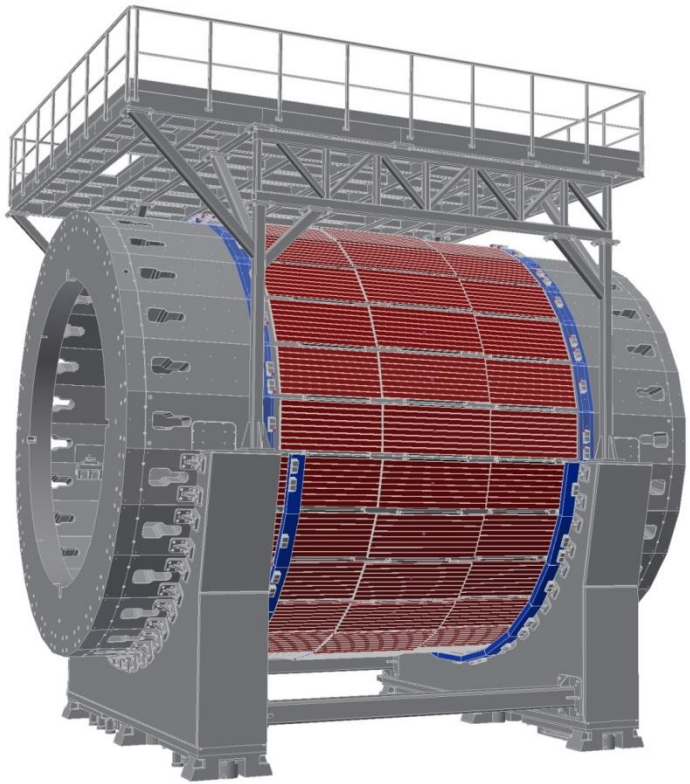

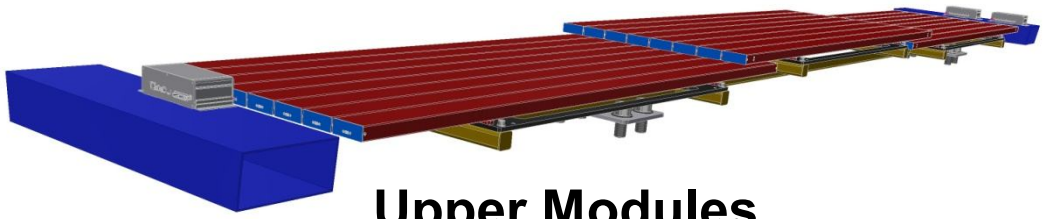

Upper Modules

Bottom Modules

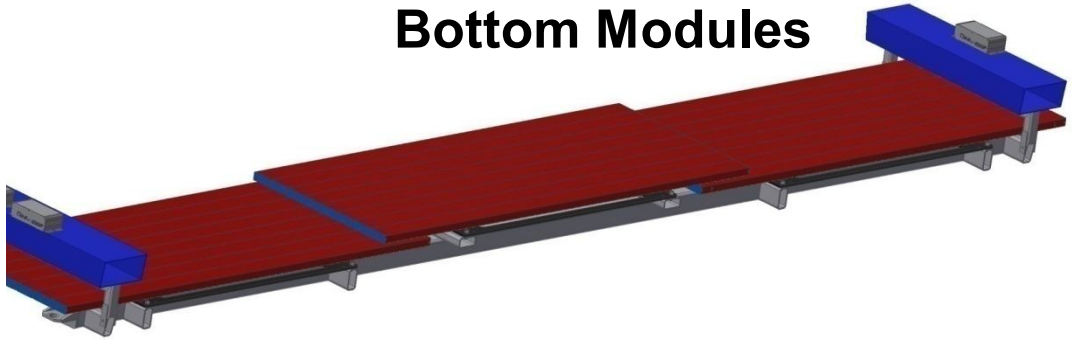

A (1 :10)

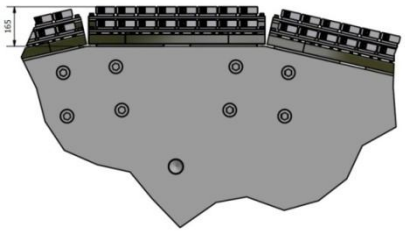

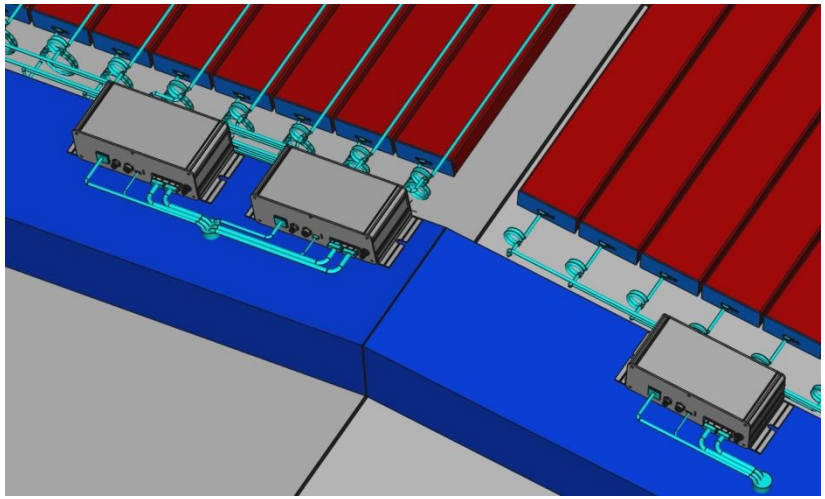

7. Mechanical construction

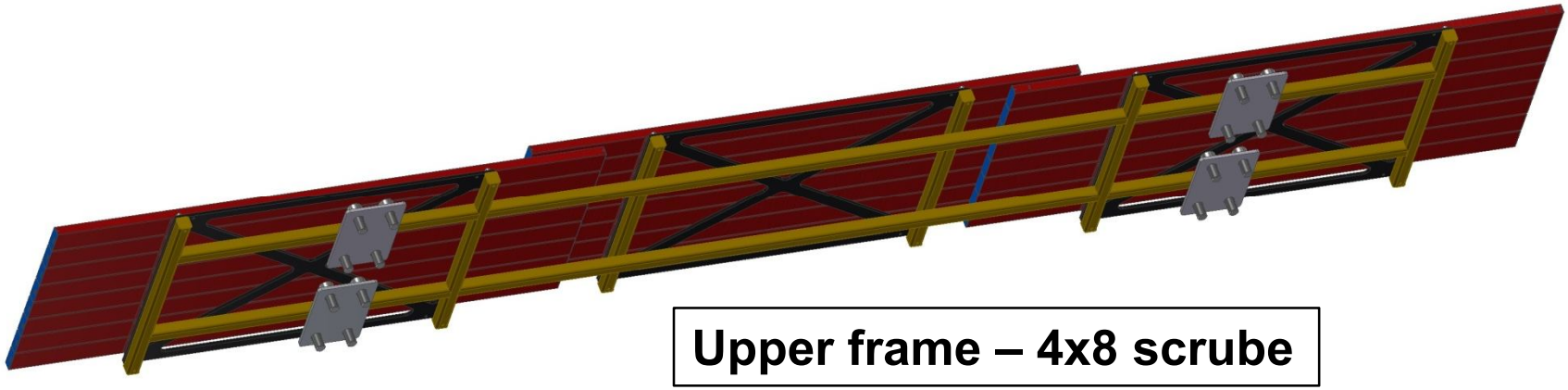

Upper frame – 4x8 scrube

Aluminum not magnetc material

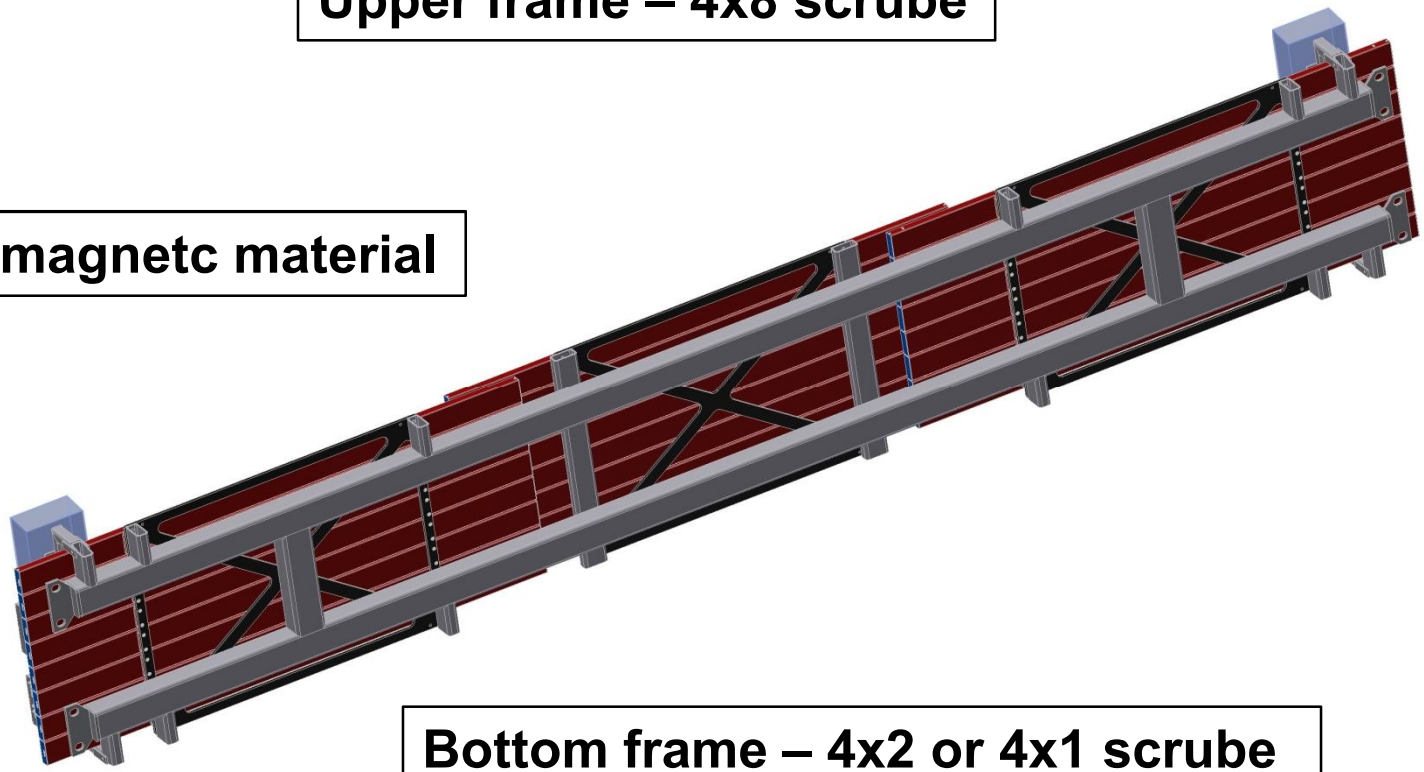

Bottom frame – 4x2 or 4x1 scrube

7. Mechanical construction

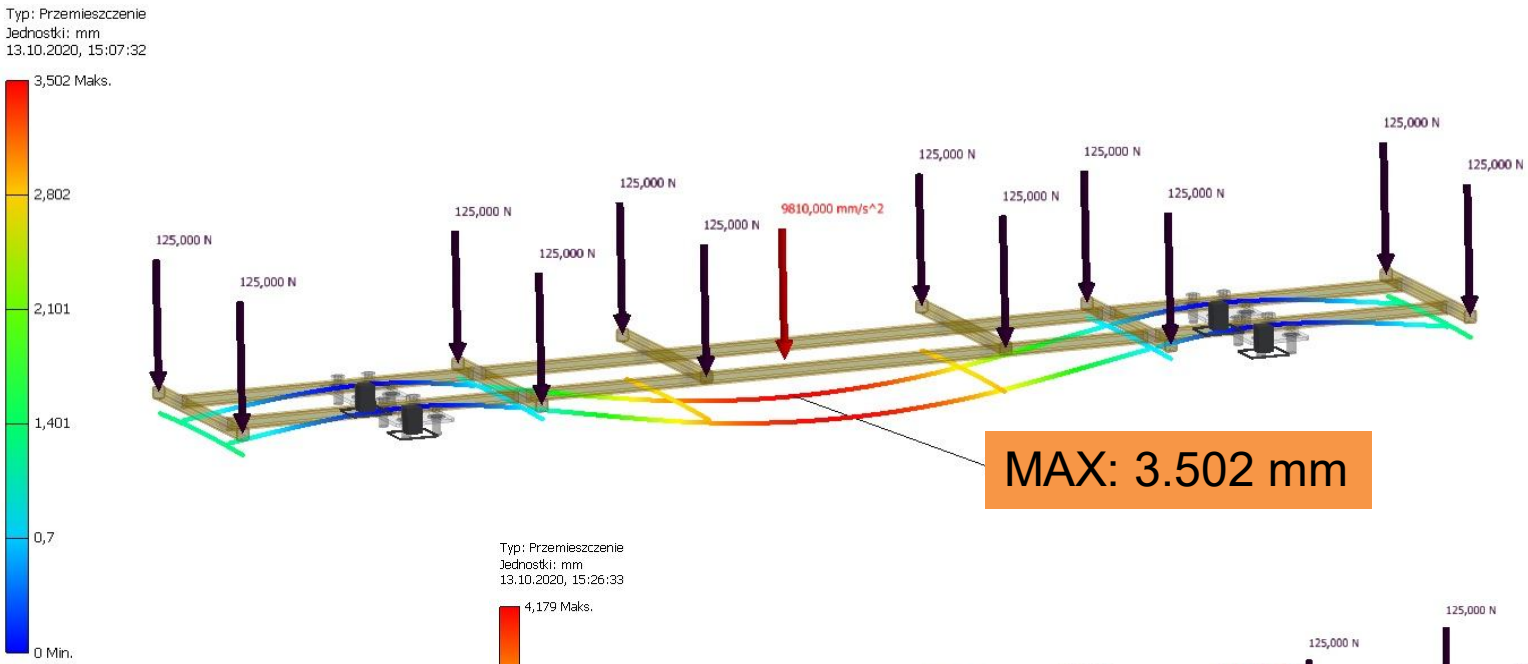

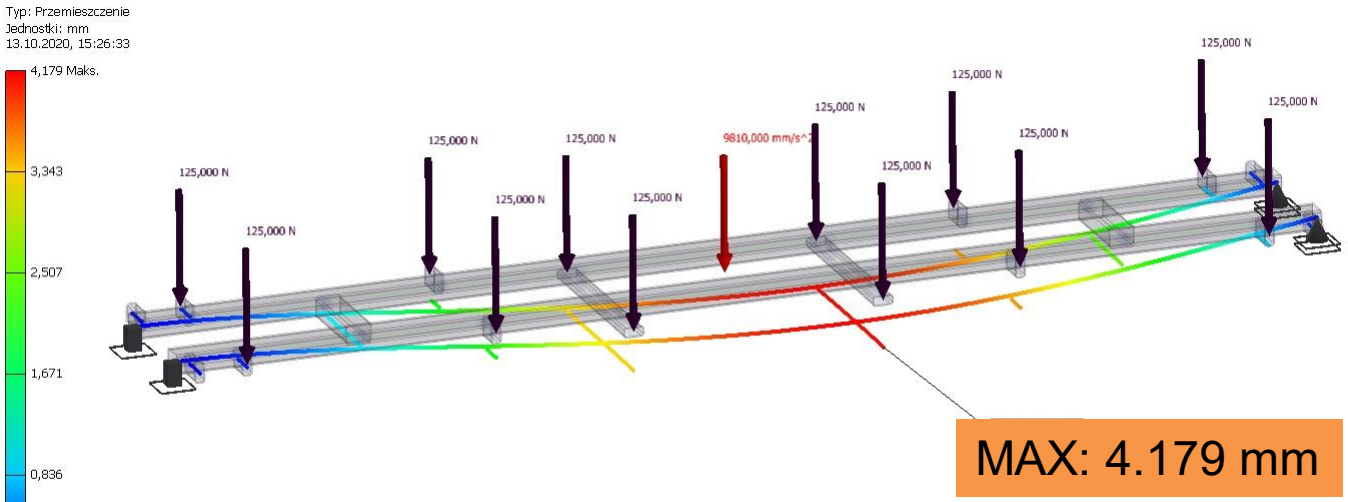

MCORD Frames strength calculations

Max. Deflection
3,5 or 4.2 [mm]
Normal stresses Smax
23,5 [MPa]
Safety factor
2,5

7. Mechanical construction

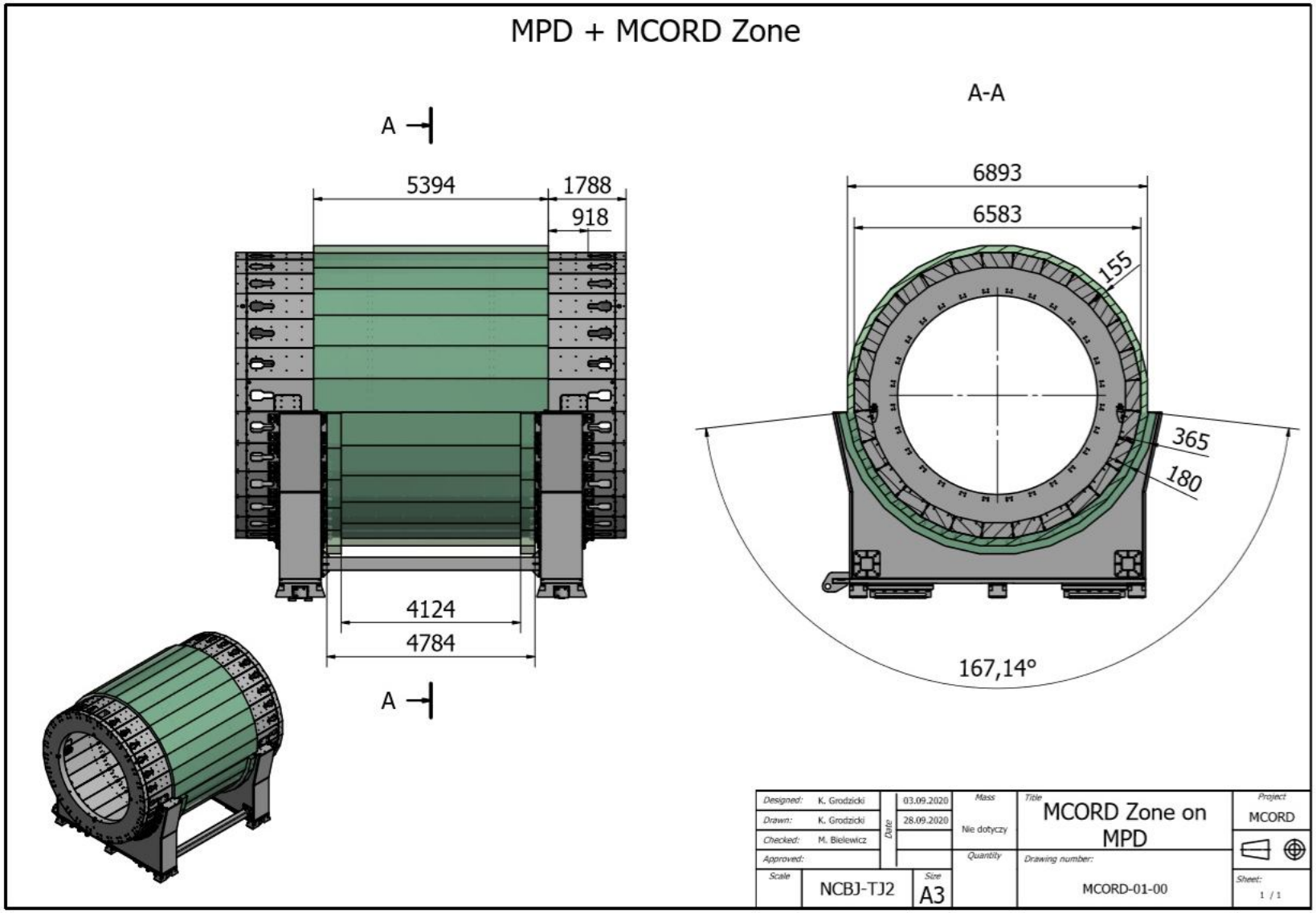

8. Summary

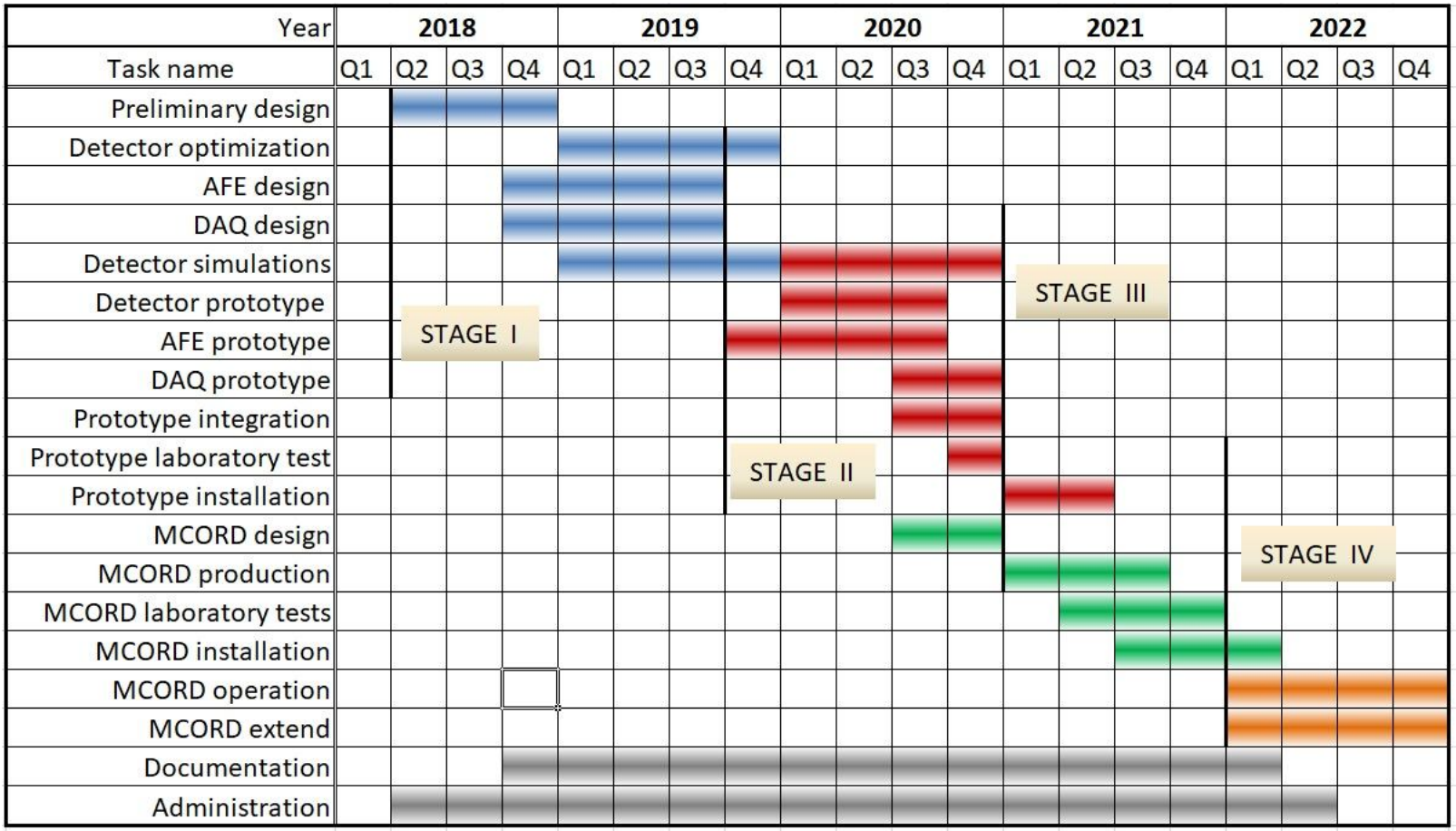

STAGE I – Design and preliminary tests
STAGE II – Demonstrator construction
STAGE III – Construction of the first 6 modules next year
STAGE IV – Construction of additional modules

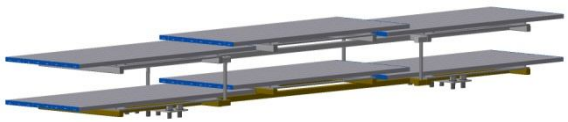

8. Summary

Description	USD
Scintillators	667 296 USD
SiPM sensors	172 200 USD
Aluminum profiles	9 408 USD
AFE modules	141 120 USD
USB-C cables	83 700 USD
Passive HUB	55 568 USD
SAS cables	55 568 USD
SMA cables	93 450 USD
FMC-TDC carts	79 976 USD
AMC-FMC carts	113 360 USD
MTCA crate	49 052 USD
PoE switch	3 845 USD
Module frames	210 000 USD
TOTAL	**1 687 475 USD**

Total cost of MCORD (without labor cost)

One MCORD Module: ~65 000 USD
One MCORD section: ~20 000 USD
First Sections: ~30 000 USD

Demonstrator: ~60 000 USD
(2 Sections)

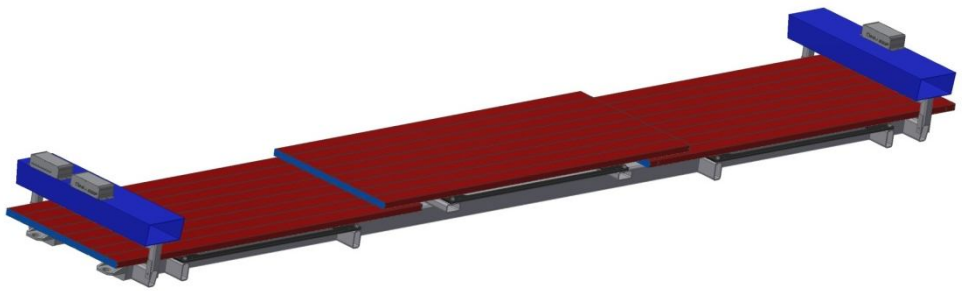

Recommended startup setup for MPD sub-detectors calibration:

6 MCORD Modules

Total cost: ~400 000 USD

8. Summary

1. MCORD is necessary for calibration of TPC, TOF and ECAL detectors **during off-beam operation of the MPD (during and after installation of other sub-detectors) .**

2. The demonstrator (2 MCORD sections) should be ready by the end of 2020 – **useful for TOF and ECal laboratory characterization**.

3. The first **6 MCORD modules** should be ready by the end of 2021 for **installation on MPD surface**.

4. We have ready CDR documentation, TDR will be ready soon.

5. MCORD can be useful for identification of **high energy muons from ion-ion collisions**.

6. MCORD can be used for **unique astrophysics observations** similar to past collider experiments.

Thank You for Attention!

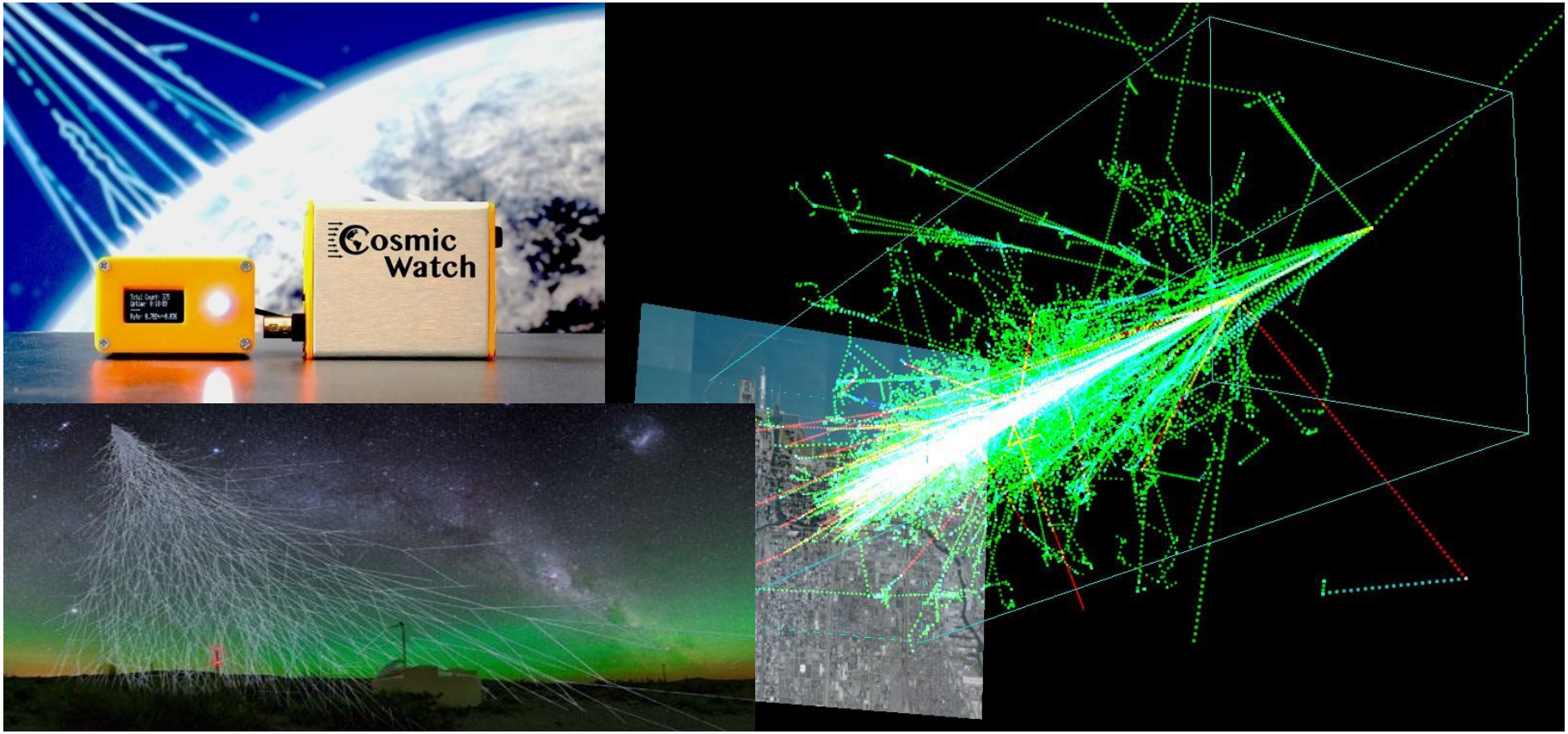

Polish consortium NICA-PL