MSC230 project

RF SYSTEMS
FOR PROTON THERAPY CYCLOTRONS

Gurskiy Semion

Talk plan

- Introduction
- MSC230 project
- RF system for a proton therapy cyclotron
- Cavity design and simulation

Synchrocyclotron

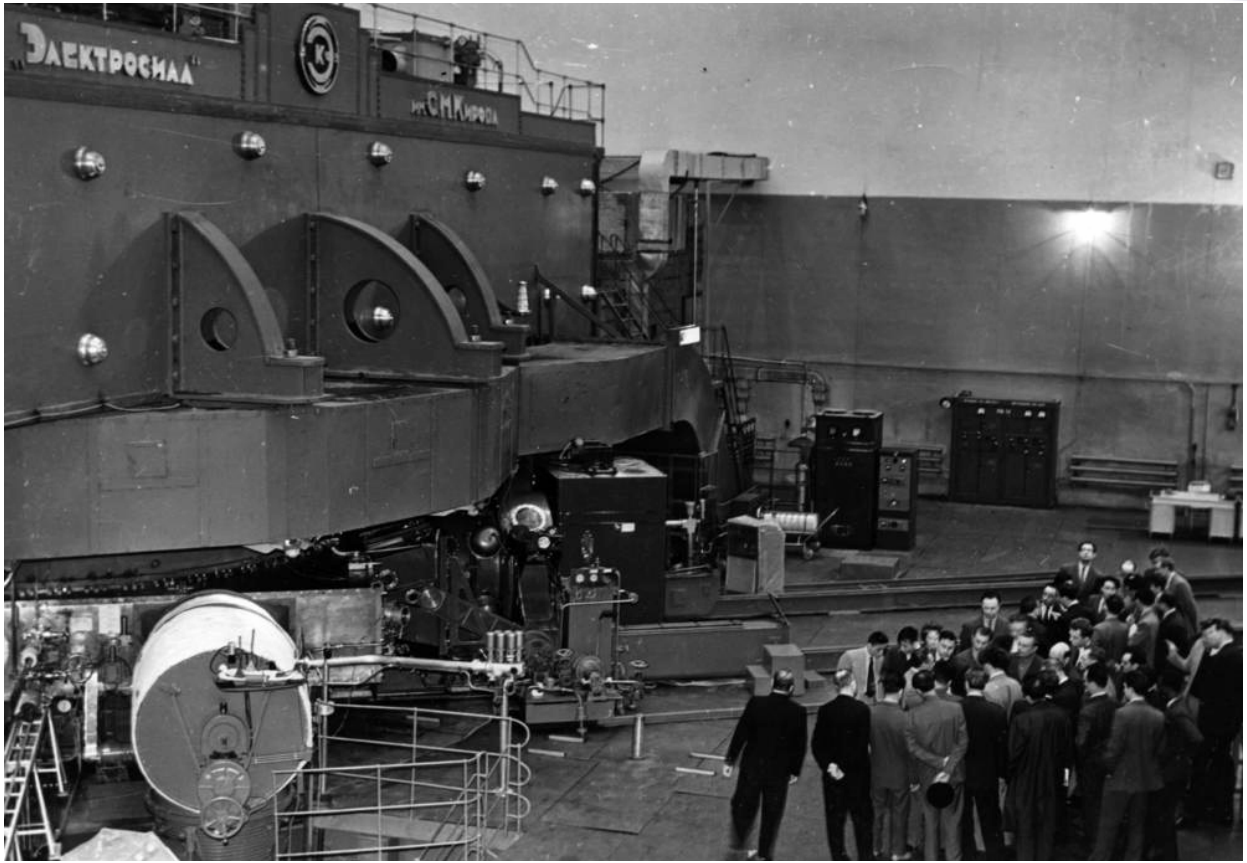

Synchrocyclotron

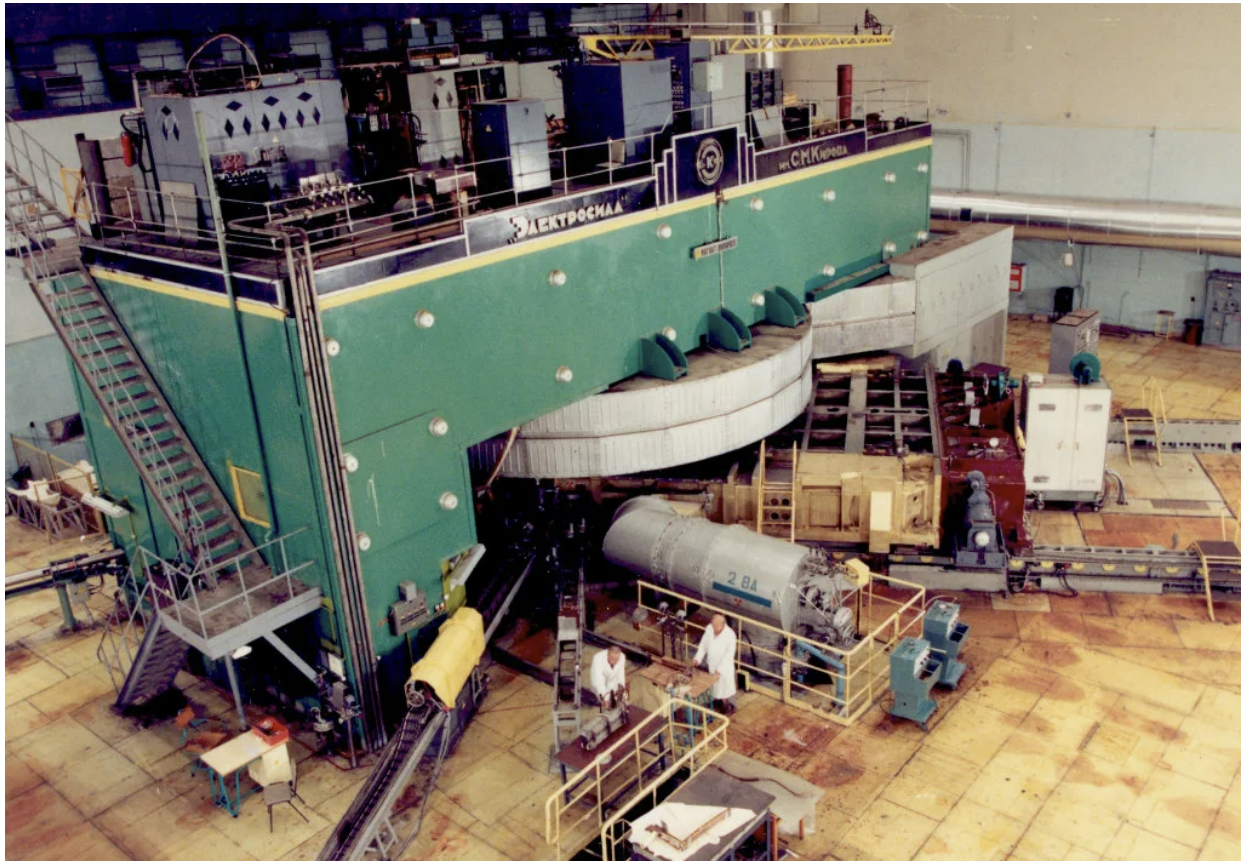

Phasotron - history



Proton therapy in JINR

Milestones of activity:
1967 – the beginning of the research on proton therapy;
1968 –1974 – first 84 patients treated with protons;
1975 –1986 – upgrading of the accelerator and construction of a multi-room Medical-Technical Complex for hadron therapy;
1987-1996 – treating of 40 patients with protons, mostly with uterine cervix cancer;
1999, December – inauguration of a Radiological Department of the Dubna hospital;
1999-2019, October - treating of about 1300 patients.
Realization of a technique for 3D conformal proton radiotherapy.



Treatment room No 1 for 3D conformal proton therapy of tumors seated in the head, neck, and trunk

Proton therapy in JINR

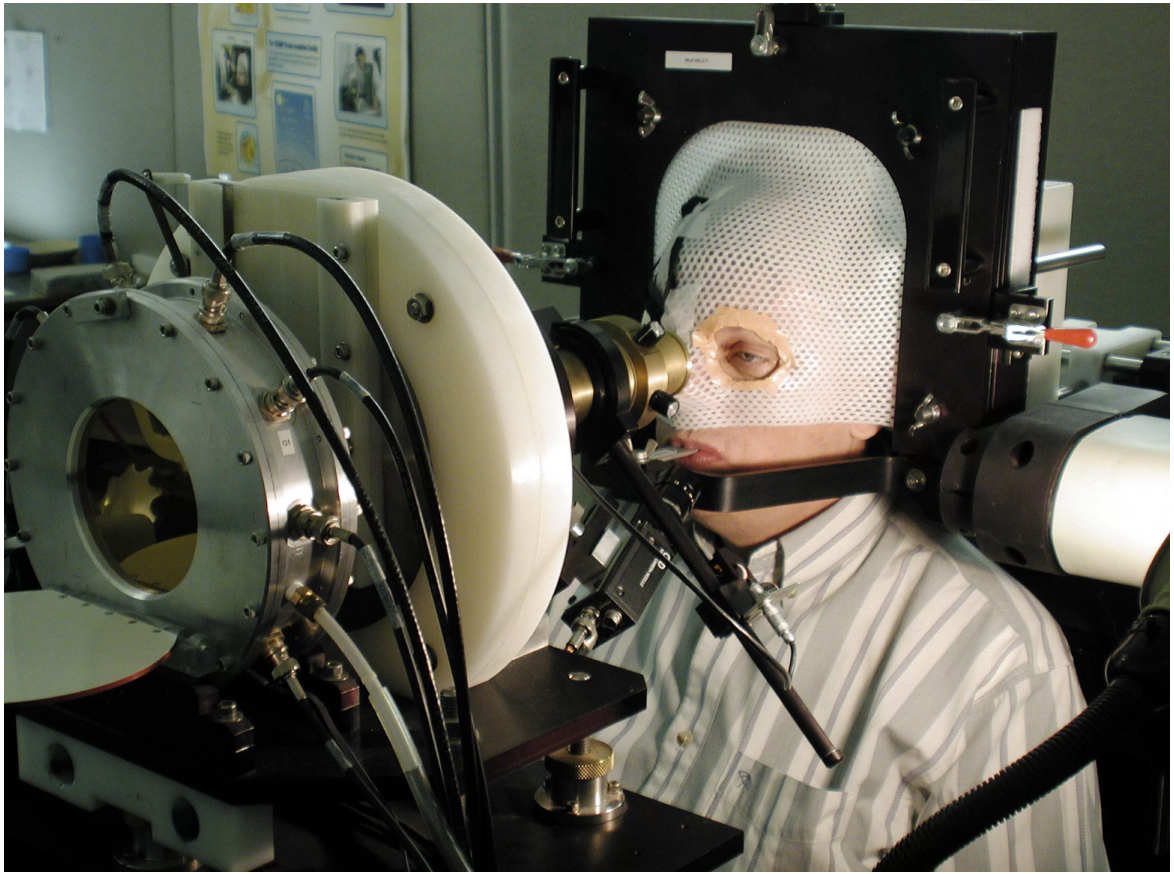

Patient positioning



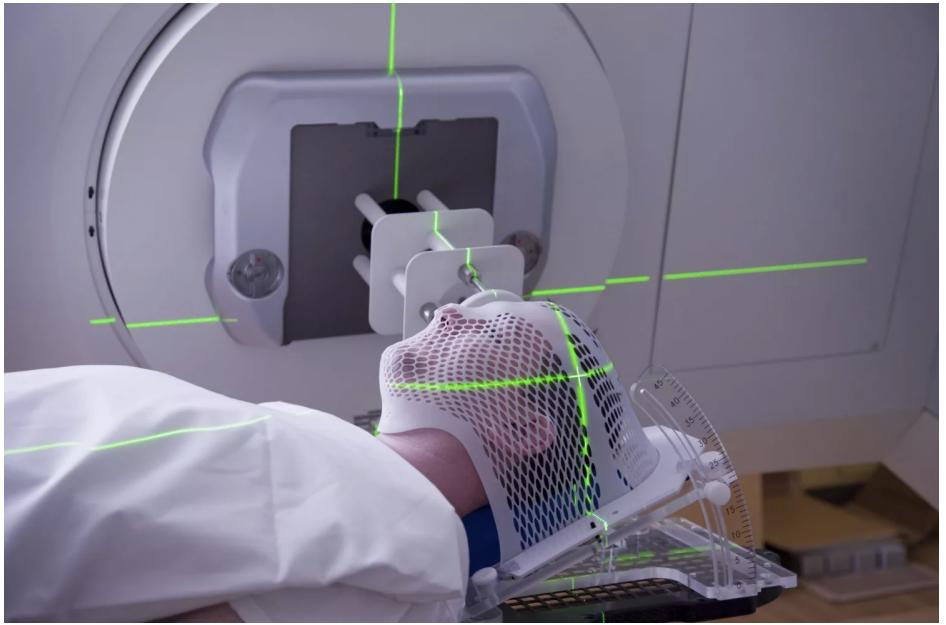

ELECTROMAGNETIC SPECTRUM

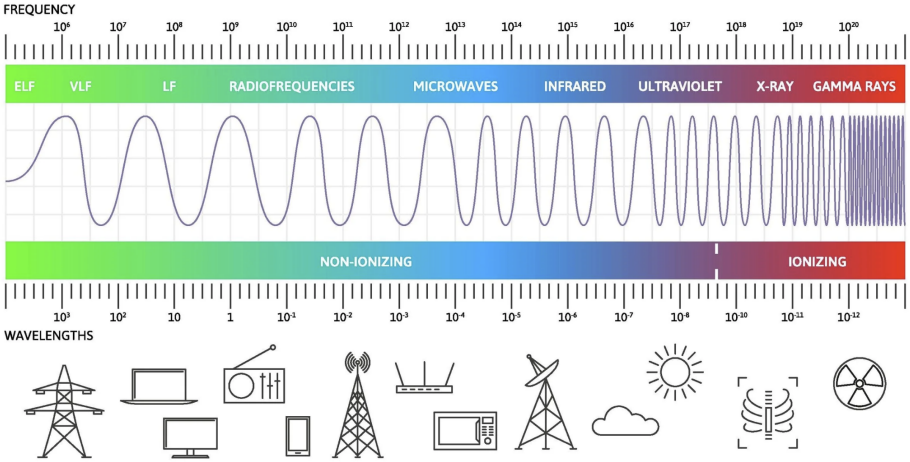

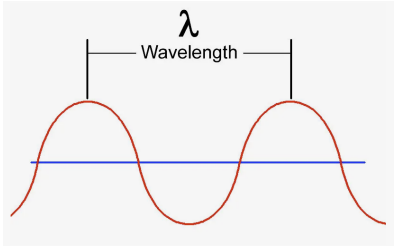

$$\lambda = \frac{c}{f\sqrt{\varepsilon}} \quad \leftrightarrow \quad f = \frac{c}{\lambda\sqrt{\varepsilon}}$$

λ = *wavelength, m*
c = *velocity of light, m/s*
f = *frequency, Hz*
ε = *dielectric constant*

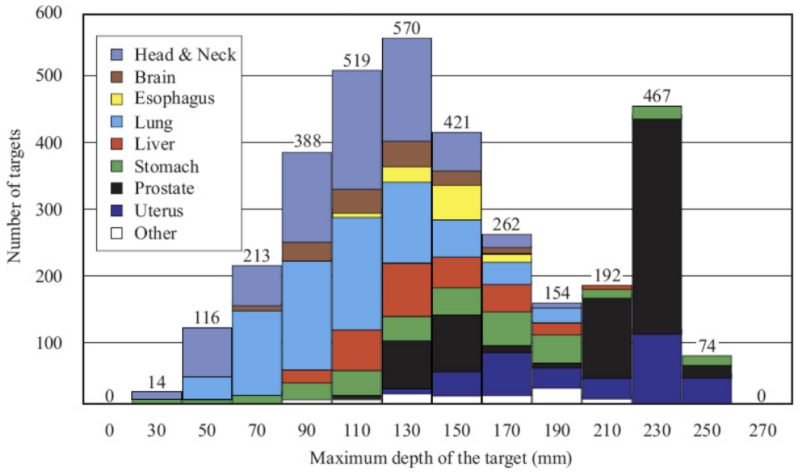

Proton therapy

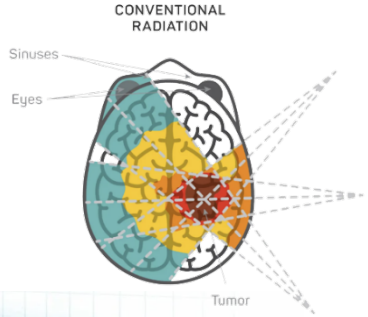

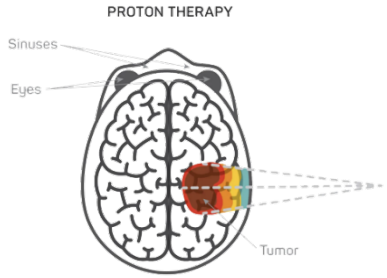

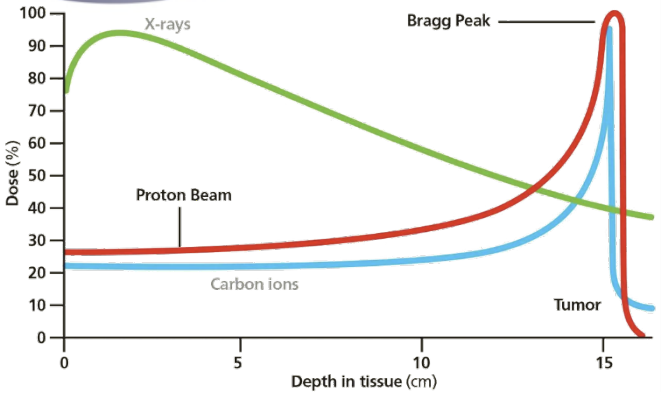

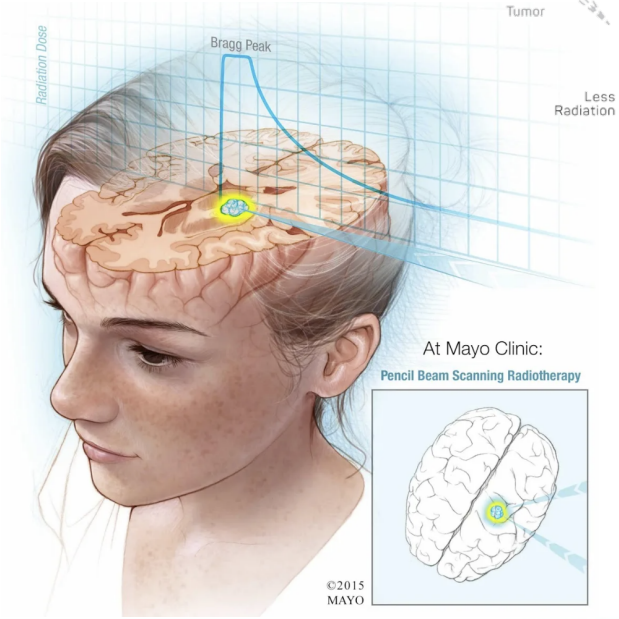

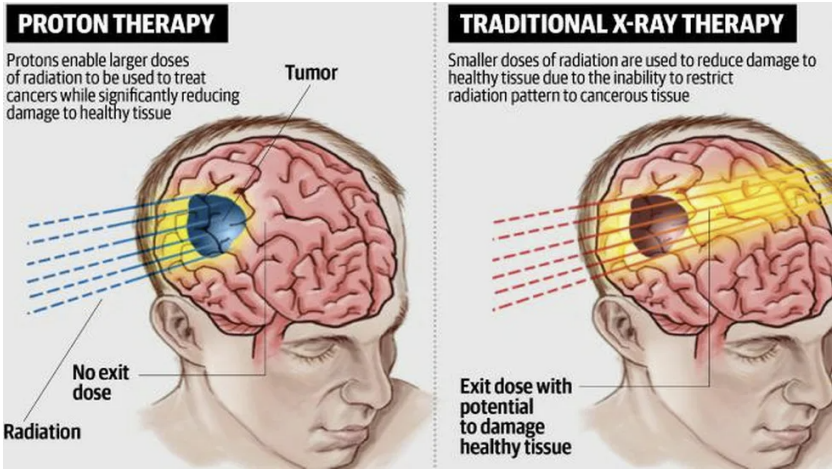

From beam to patient

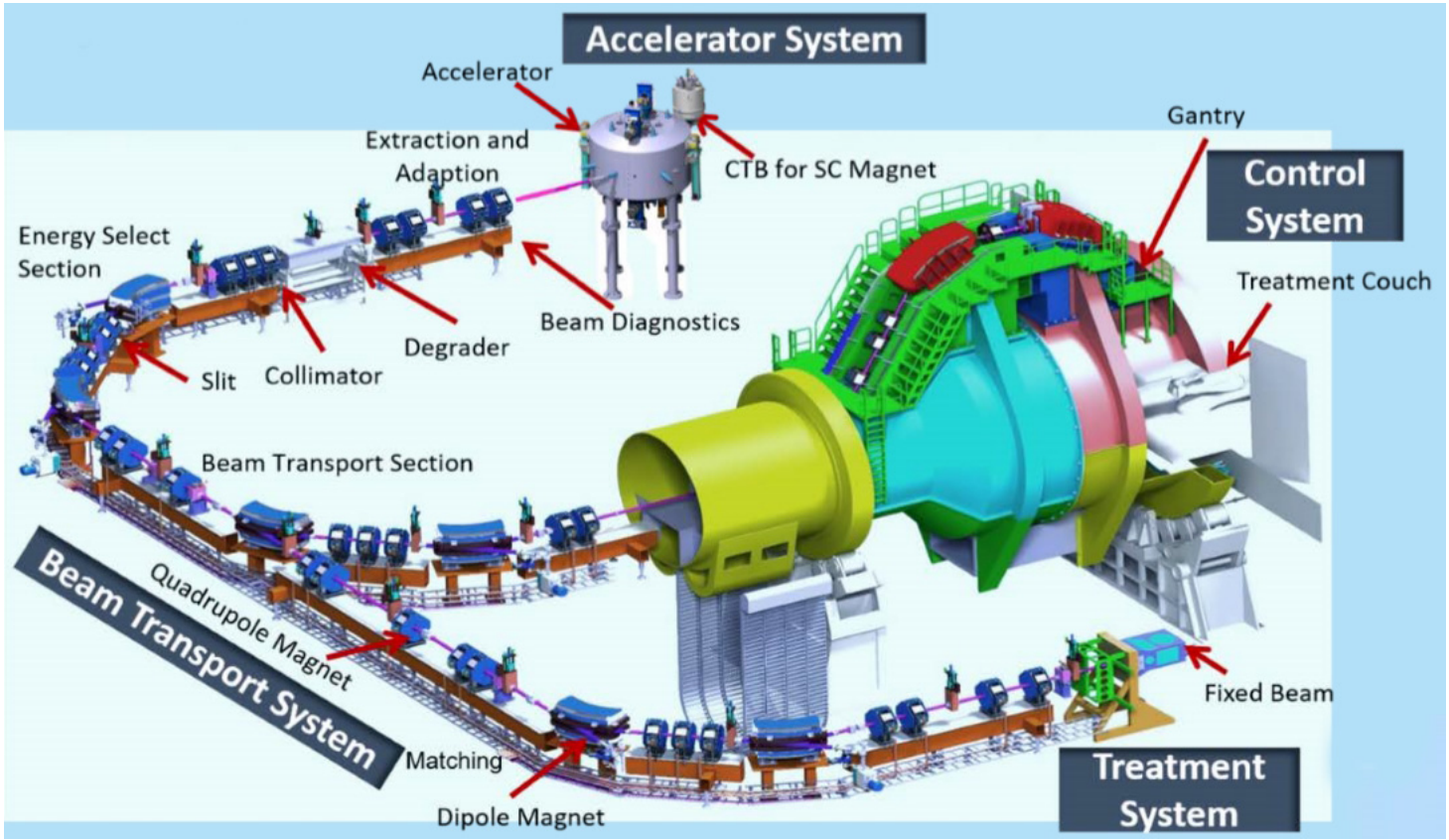

MSC230 project

- proton radiation therapy and biomedical research.
- studying the features of formation, acceleration, and delivery of high-intensity accelerated proton beams to the irradiation zone
- development and research of **FLASH** therapy techniques;
- training and advanced training of specialists in the field of radiation biology and medicine
- preparation of mass production and introduction into clinical practice of the latest technological equipment for proton therapy of oncological diseases
- Creation of a proton therapy center in Dubna

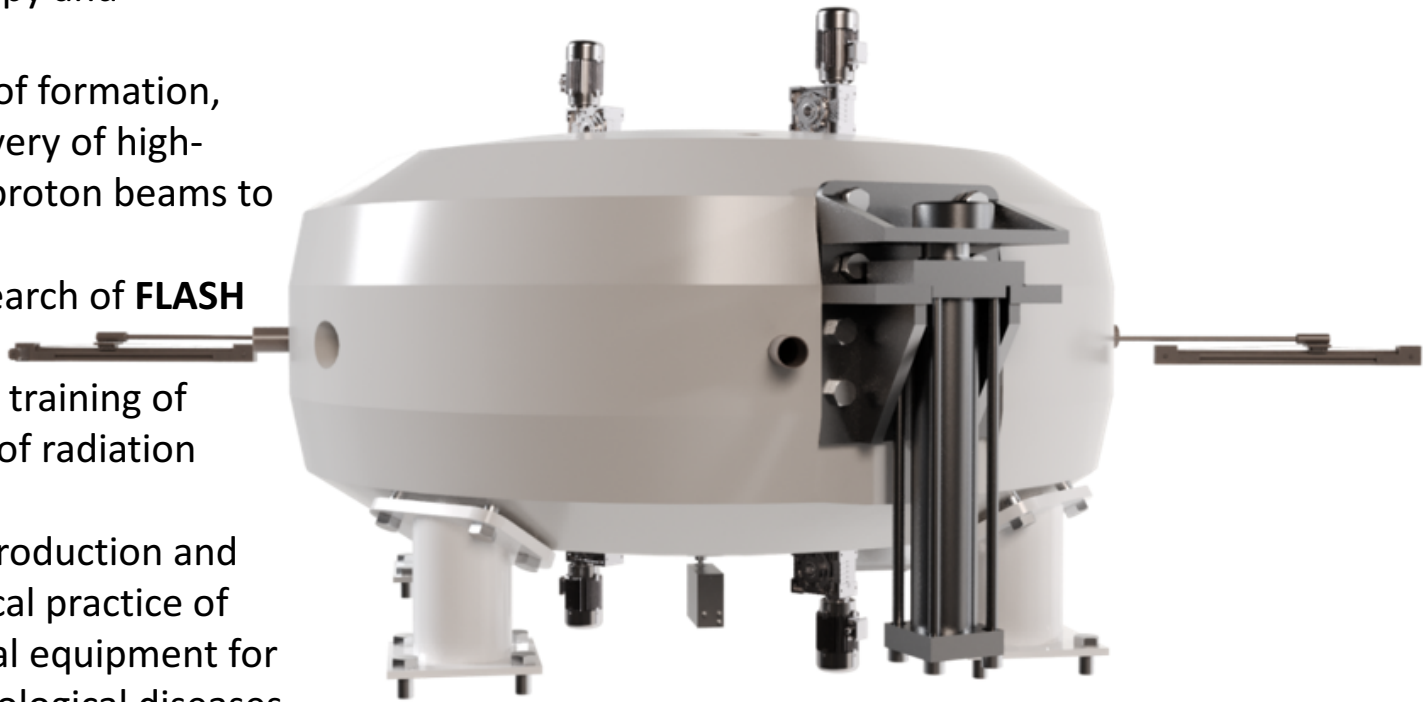

MSC230 project

Magnet type	Compat, SC coil, warm yoke
Ion source	PIG
Final energy, MeV	230
Beam extraction radius, mm	1070
Magnetic field (center), T Magnetic field (extract. radius), T	1.7 2.15
Dimensions (height×width), mm	1900 × 3860
Weight, tonnes	130
Hill/Valley gap, mm	50/700
A*Turn number	290 000
RF frequency, MHz	106.5
Harmonic number	4
Number of RF cavities	4
Voltage, center/extraction kV	40/110
RF power, kW	60
Number of turns	500
Beam intensity (Single pulse mode)	
I, μA	10 μA
Pulse duration, ms	10 – 100
Pulse frequency, Hz	0.01 – 1
Current stability from pulse to pulse (on the flat part of the pulse)	± 5%.
Beam intensity (Continuous mode)	
I, μA	1 μA
Current stability	± 5%

MSC230 project

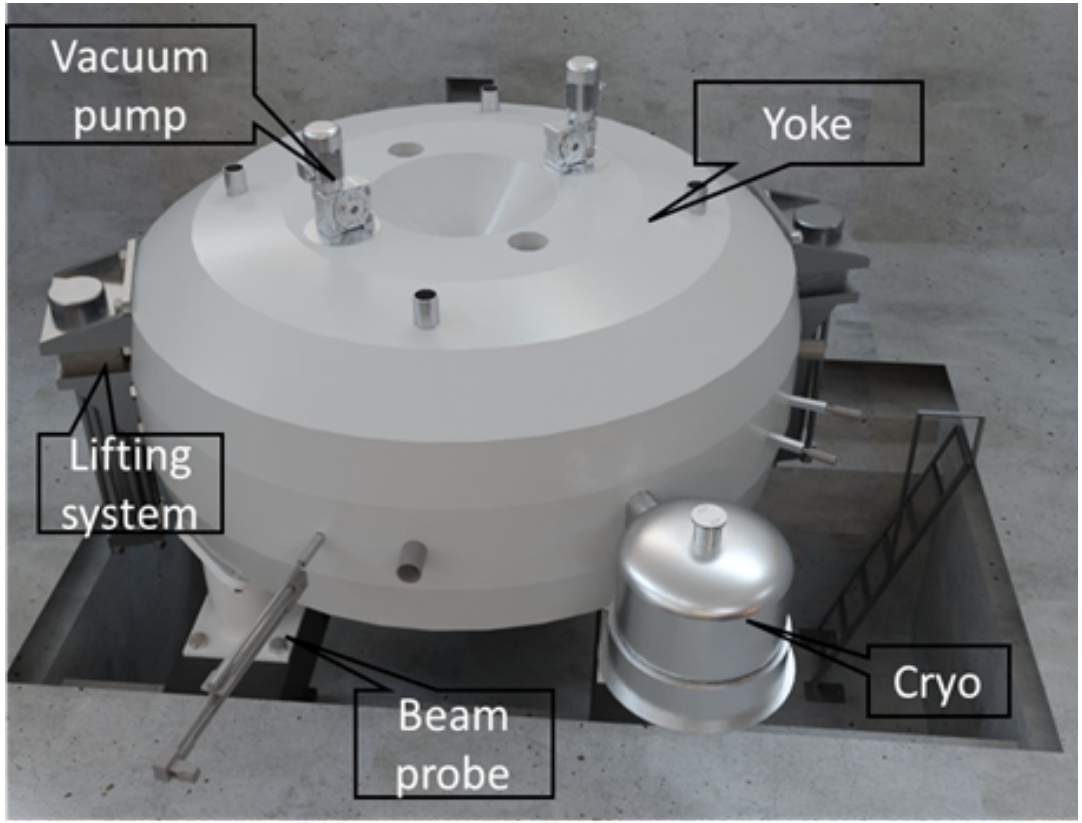

MSC230 project



MSC230 project

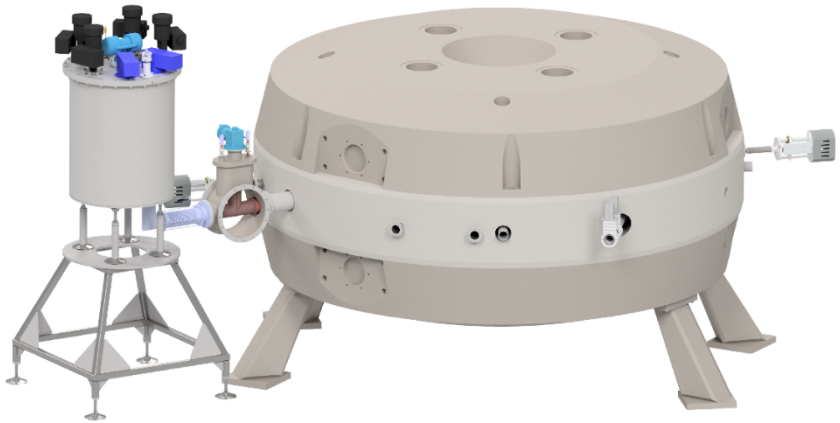

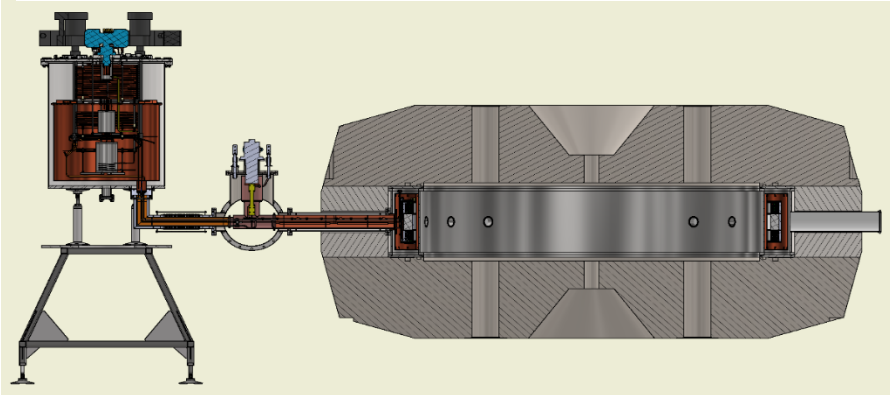

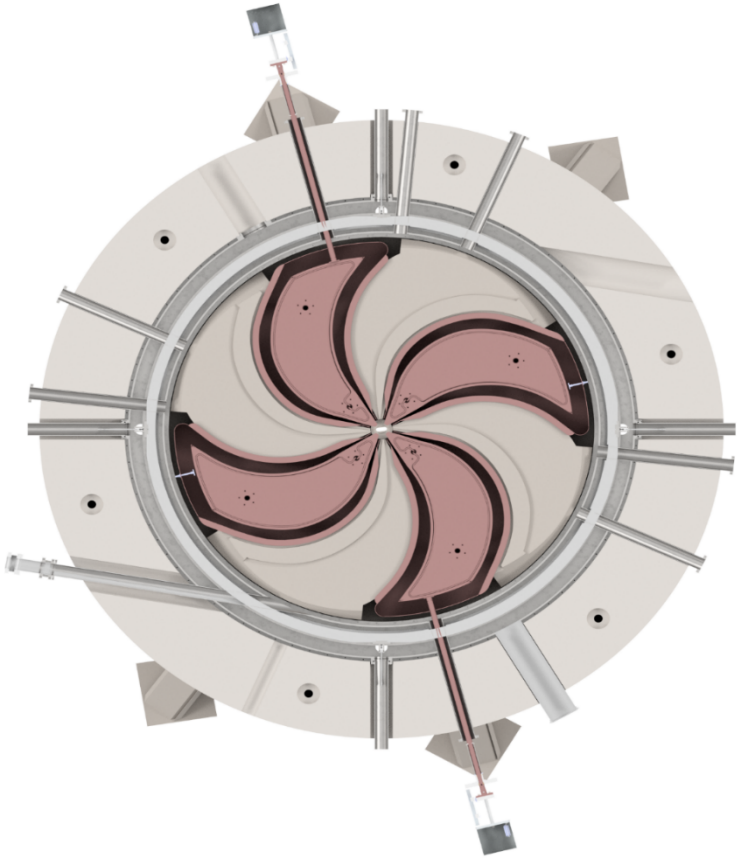

Cryostat assembled with a refrigerator and a current leads unit (transverse section)

MSC230 magnet

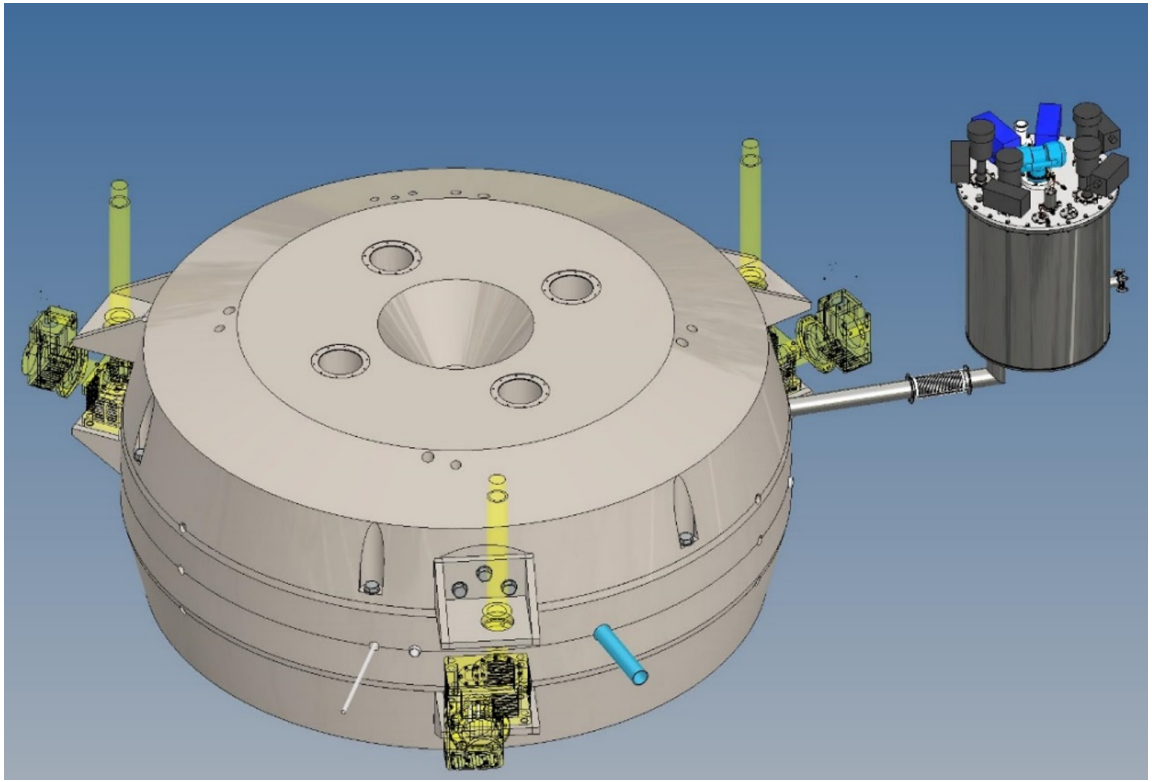

Main parameters	
Magnet type	SC coil, warm yoke
Ion source	PIG
Final energy, MeV	230
Weight, tonnes	130
Dimensions (height×width), mm	1900 × 3860
Magnetic field (R_0/R_{extr}), T	1.7/2.15
A*Turn number	290 000
RF frequency, MHz	106.5
Harmonic number	4
Number of RF cavities	4
RF power, kW	60
Number of turns	500
Beam intensity, μA	10

MSC230 magnet

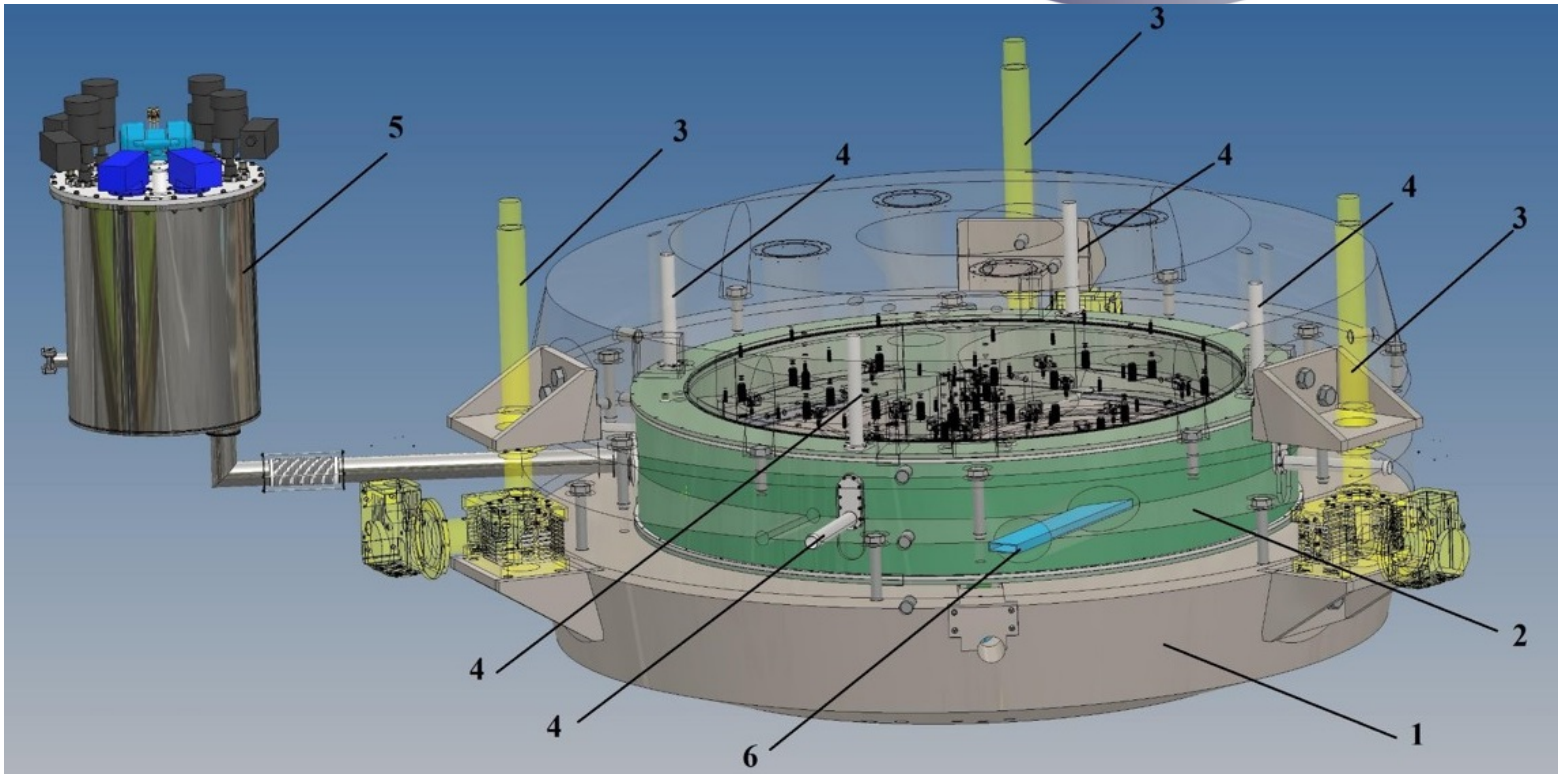

View of the MSC-230: 1- magnet yoke, 2 –superconducting coil and cryostat, 3 – lifting system, 4 – tie rods, 5 –refrigerator, 6 – beam extraction tunnel

MSC230 magnet

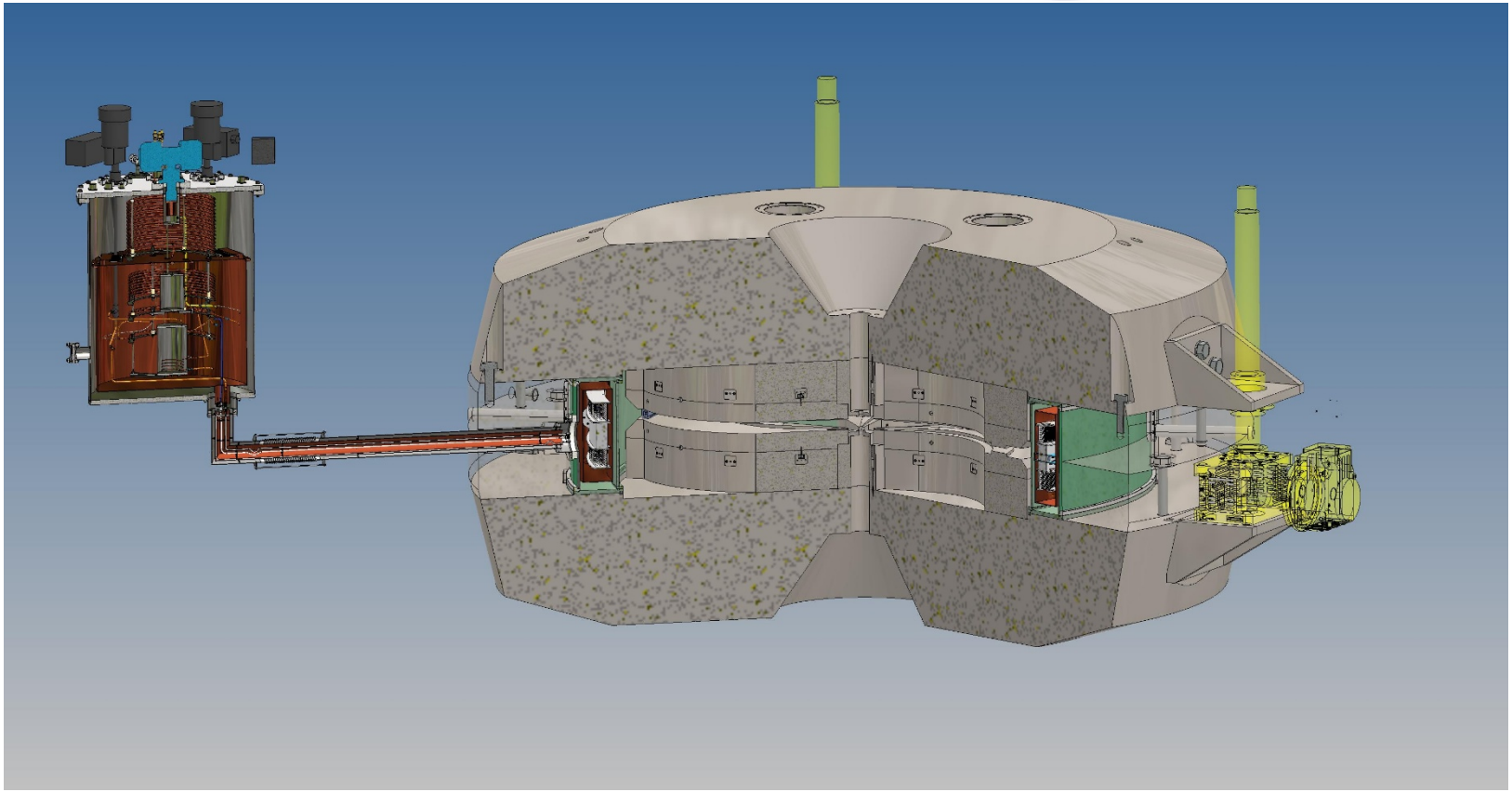

MSC230 cryogenic system

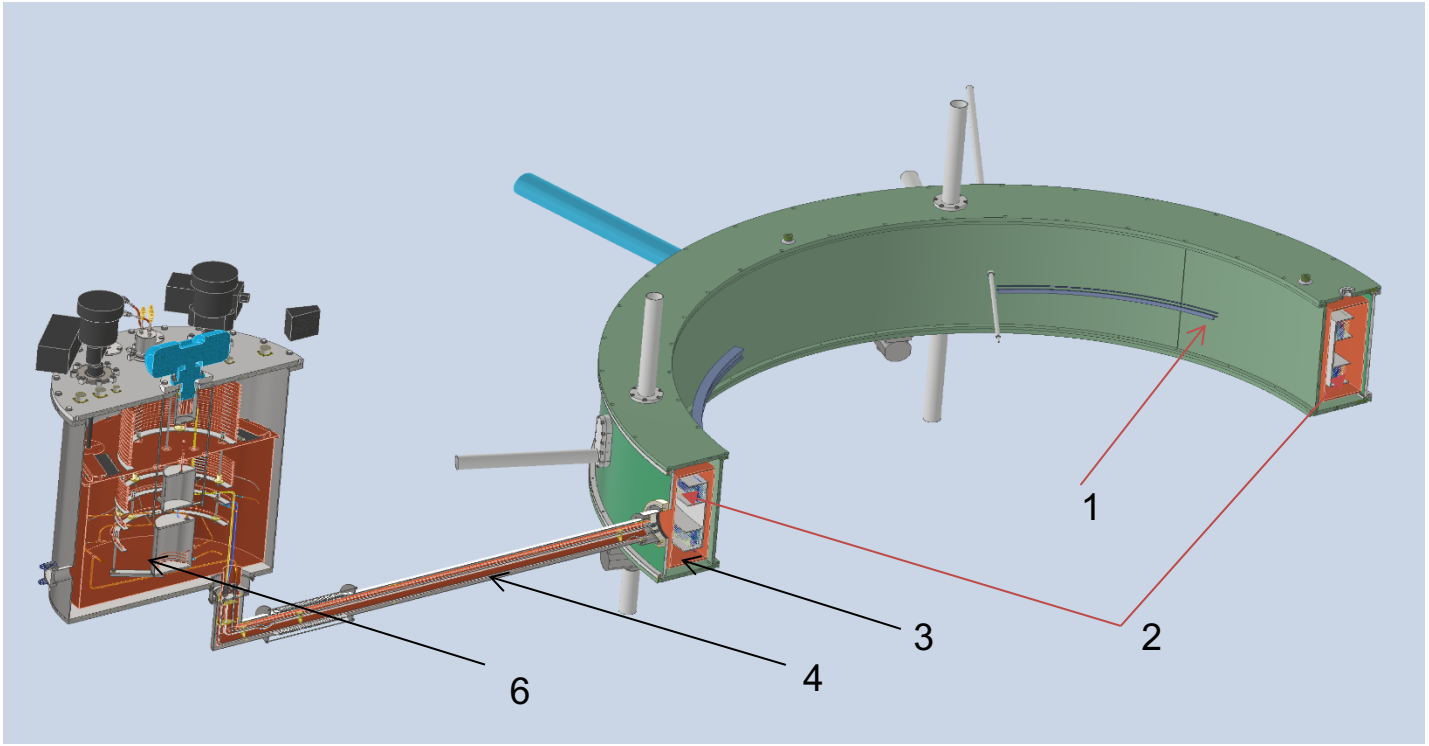

1 – cryostat; 2 - superconducting coils; 3 – thermal shield; 4 – siphon; 5 – refrigerator

MSC230 cryogenic system

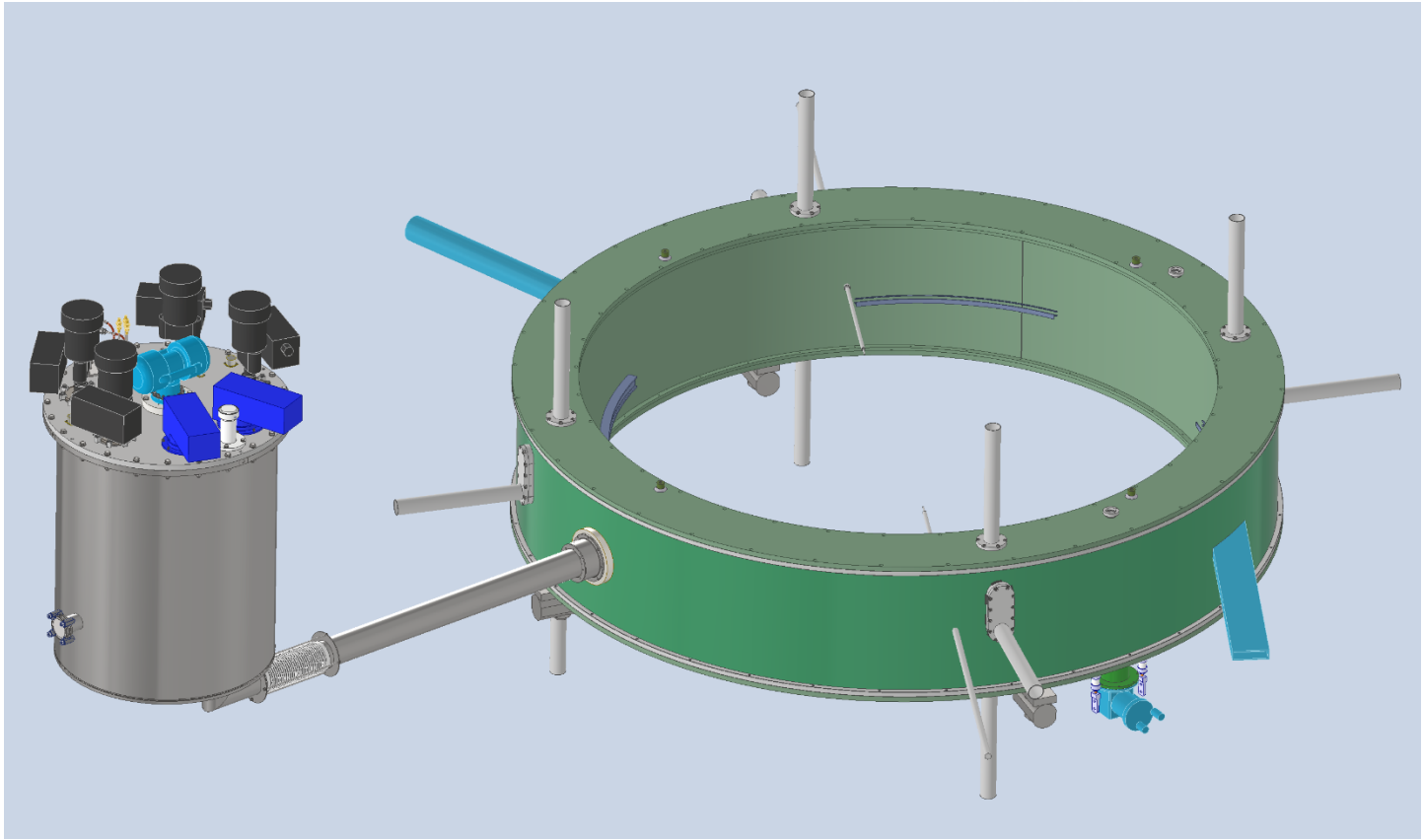

MSC230 cryogenic system

The vacuum casing of the cryostat consists of outer and inner case, top and bottom covers, connected by flanges with an elastomer vacuum seal. The covers and outer case accommodate the axial and radial coil support assemblies. The standard attachment fittings and beam extraction channel, extending through the cryostat into the cyclotron vacuum volume, will be welded during the final assembly of the cryostat.

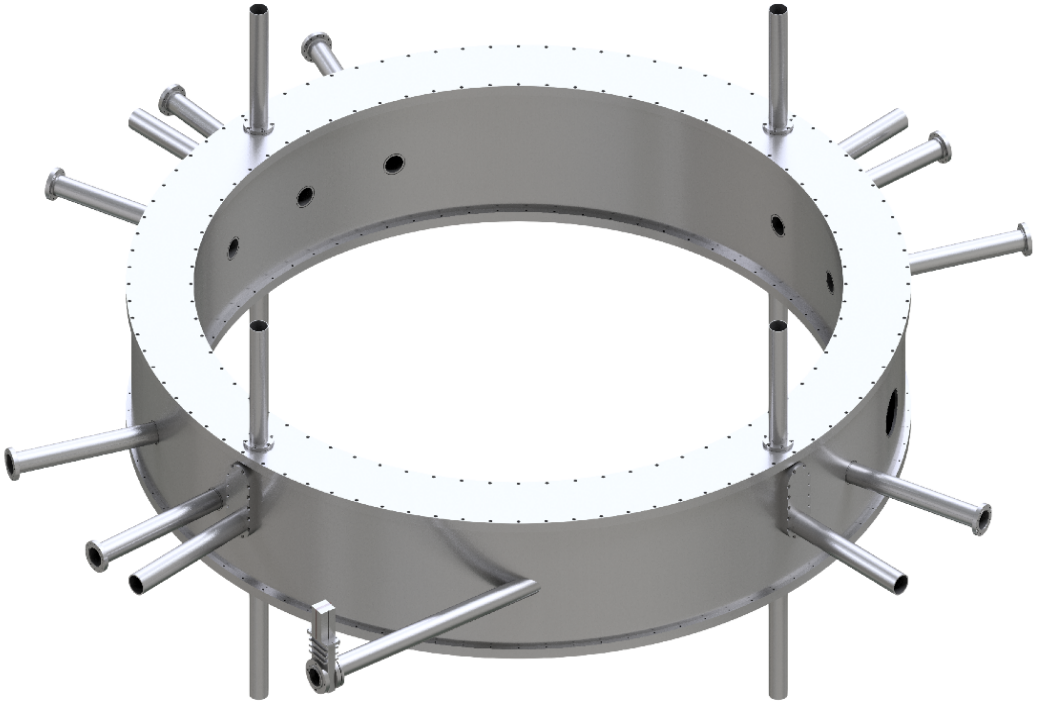

MSC230 cryogenic system

The technology with the use of a hollow composite superconductor co proposed at the VBLHEP JINR and well-proven in the magnets of the Nuclotron synchrotron, was chosen as the basis for the manufacture of the coils.

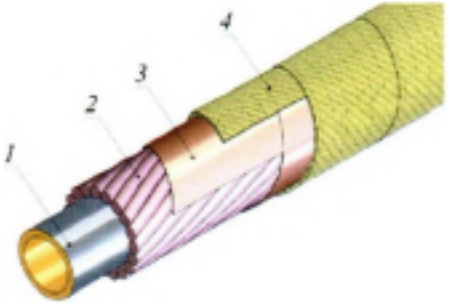

1 - a tube with a channel for cooling; 2 - superconducting wire; 3 - polyimide tape; 4 - glass fiber tape

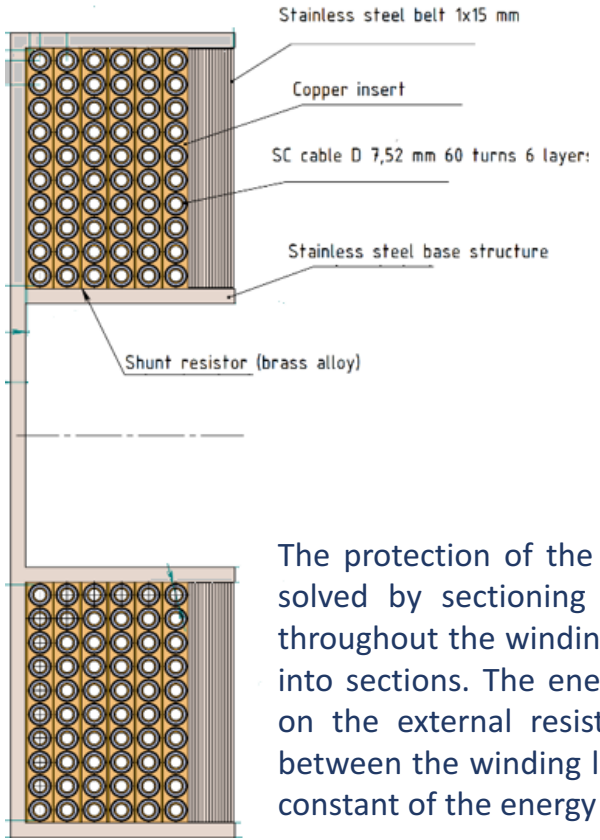

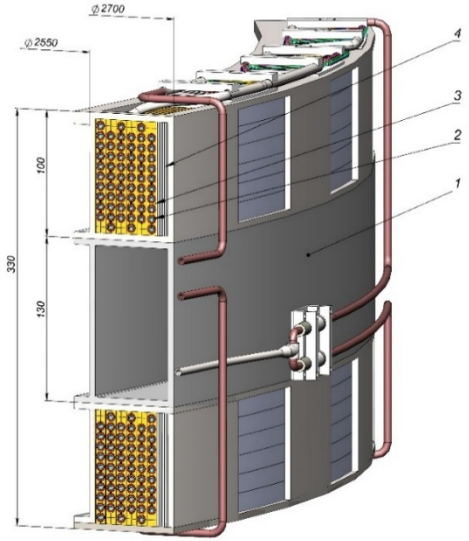

The protection of the magnet from overheating during quench is solved by sectioning the solenoid and uniform energy release throughout the winding. For this, the winding is electrically divided into sections. The energy stored in the magnet is dissipated both on the external resistance and on 36 shunts - heaters located between the winding layers of the upper and lower coils. The time constant of the energy evacuation process will be 17.9 s.

MSC230 cryostat

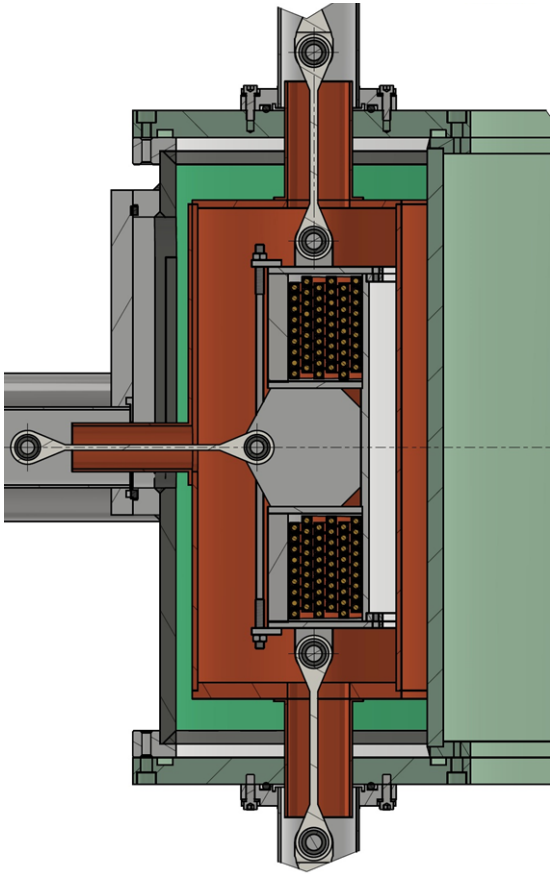

The electric power source is a 600 A DC power supply with a current stability of 1*10-5

The superconductivity breakdown protection system consists of a superconductivity breakdown indication system and an energy evacuation system stored in the magnet.
The superconductivity breakdown indication system is based on a magnet transition sensor developed for NICA magnets. The energy evacuation system is under development.

The system for automatic collection and control of cryogenic parameters is under development. It will be based on Siemens controllers and Russian MasterSCADA4D software.

MSC230 refrigirator

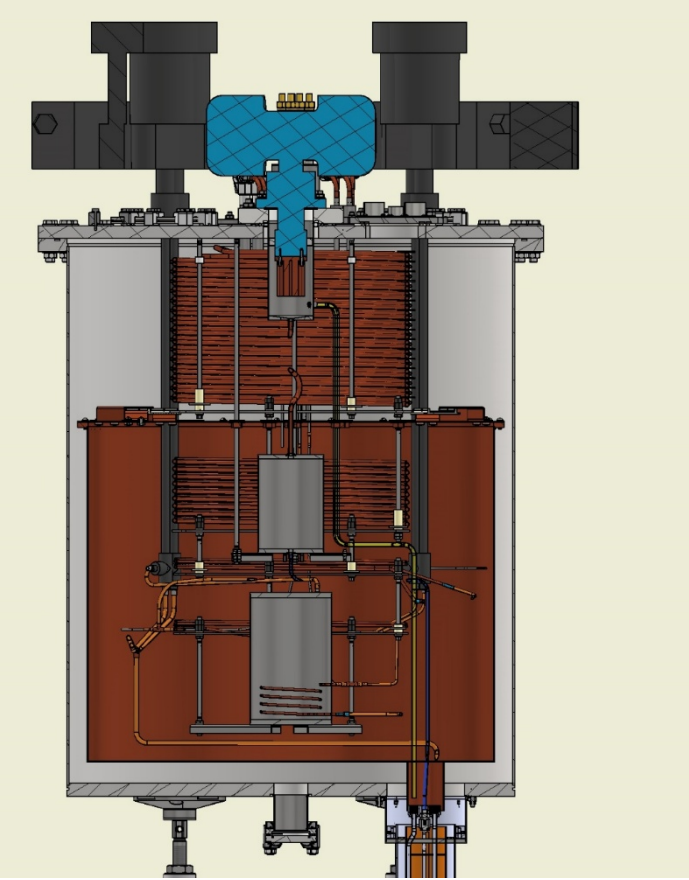

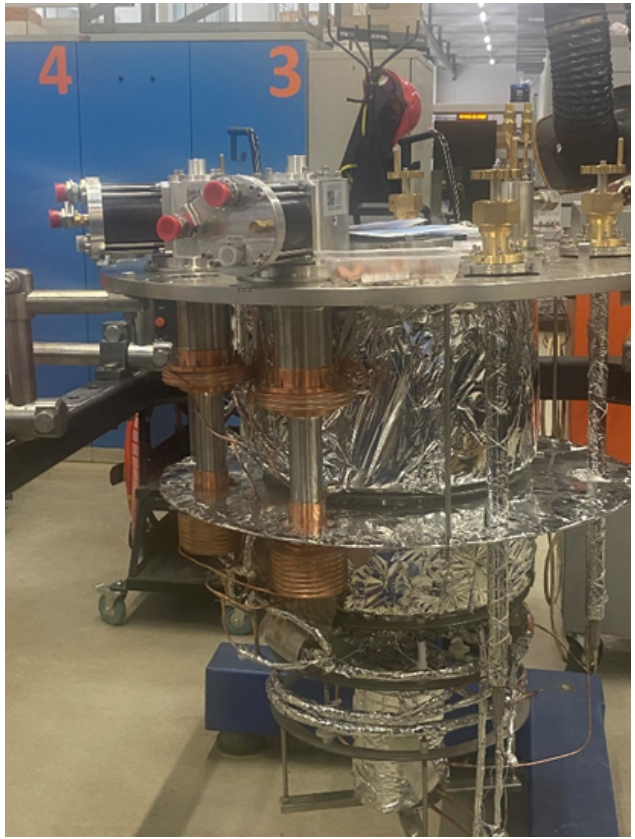

The key element of cryogenic system - refrigerator is ready for testing

MSC230 refrigirator



- Installation of valves, nitrogen shield cover, nitrogen tank.
- Insulation of the heat exchanger, shield cover and nitrogen tank

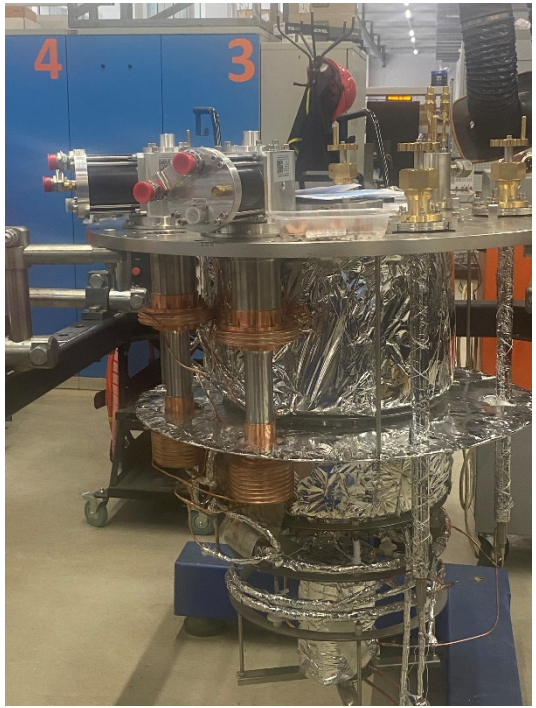

The key element of cryogenic system - refrigerator is ready for testing

MSC230 helium line

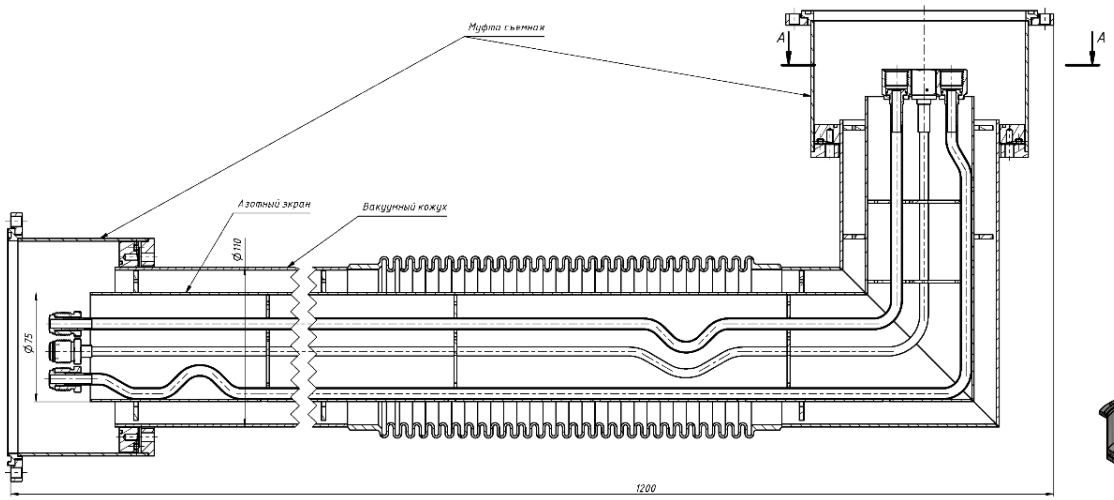

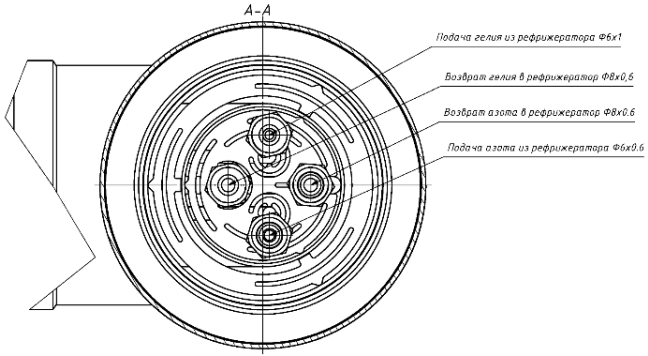

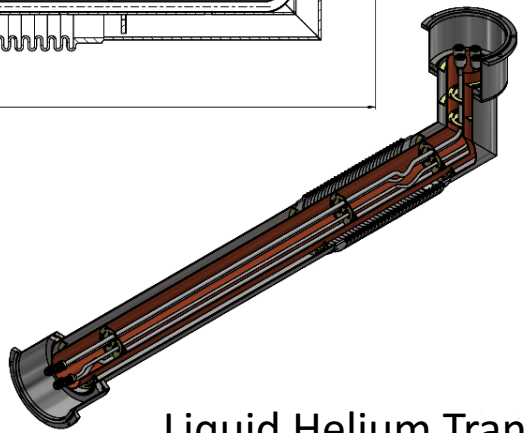

Liquid Helium Transportation Line

MSC230 mock-up coil

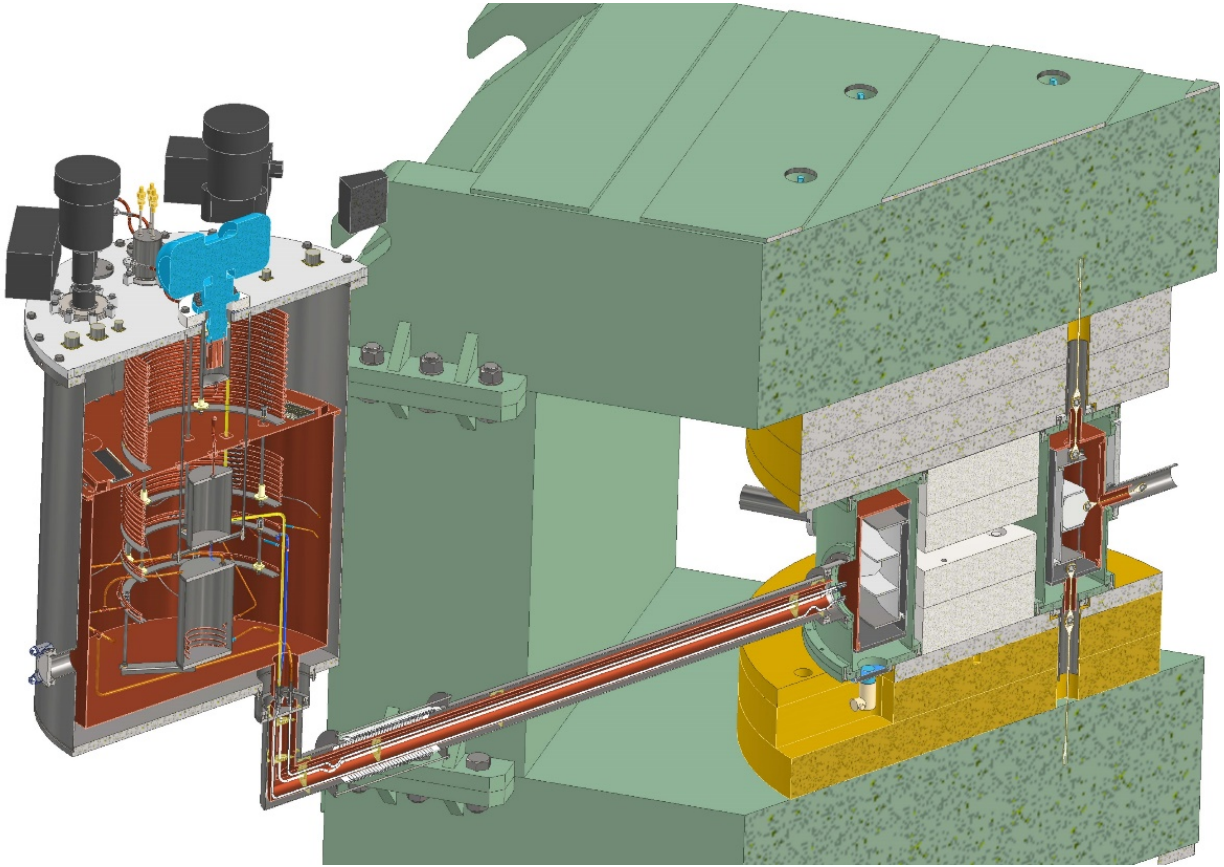

The model coil is designed to test technological solutions.

MSC230 mock-up coil



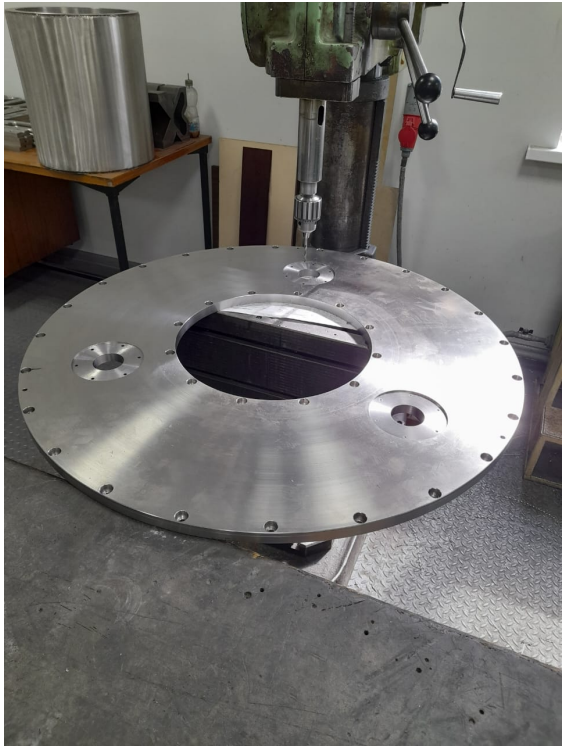

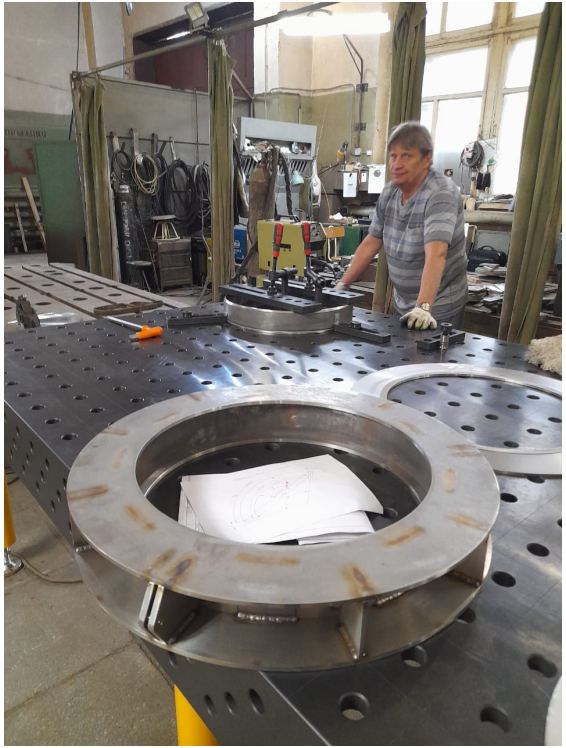

MSC230 yoke production

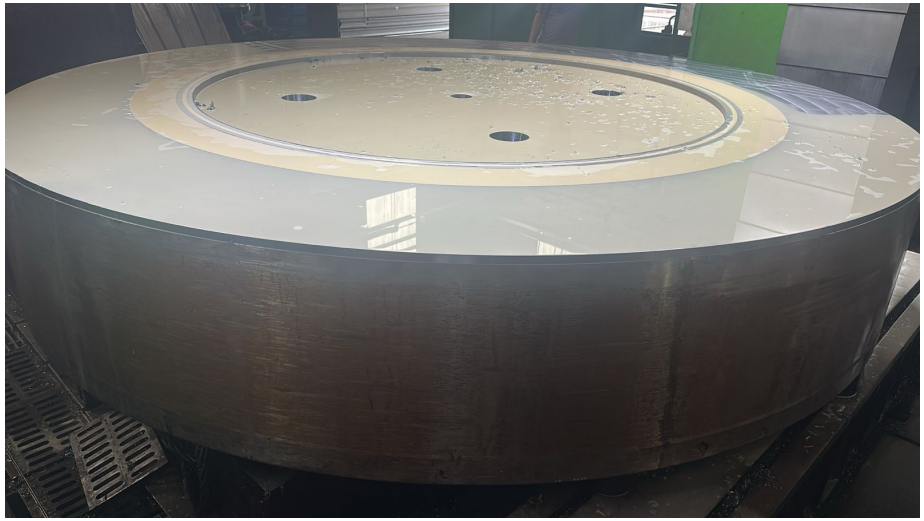



MSC230 RF system

Harmonic number	n	4
RF frequency	MHz	106,5
Dee number		4
Half-cavity stems		2
Number of power amps		1
Dee voltage	kW	30 - 80
Simulated dissipated power	kW	60
Frequency trimmers		4
Simulated unloaded q factor		11200

MSC230 RF system

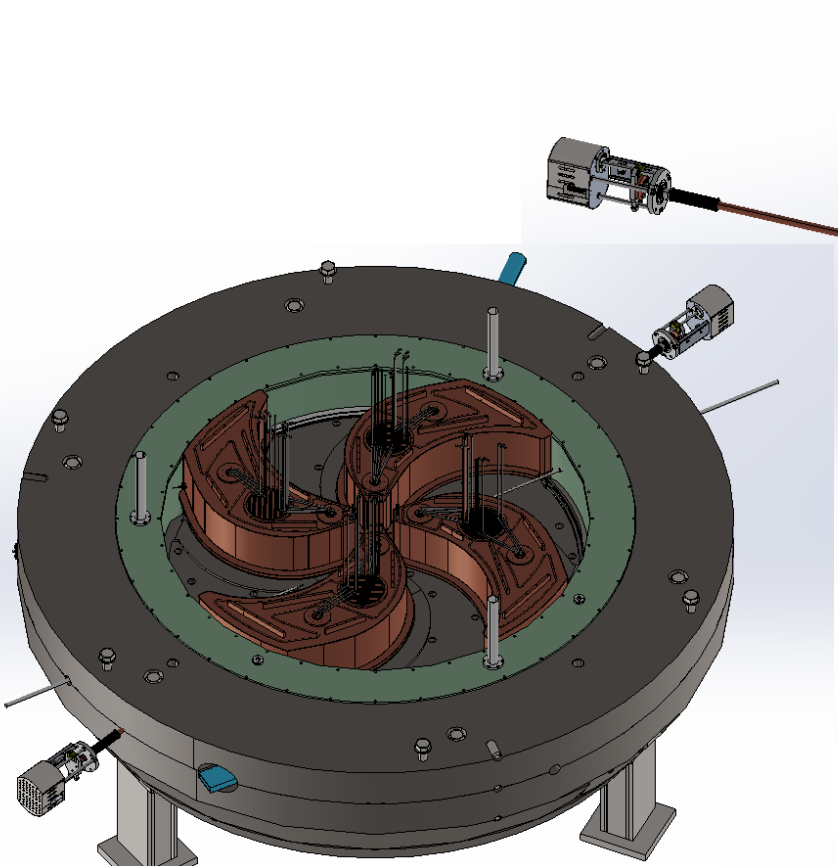

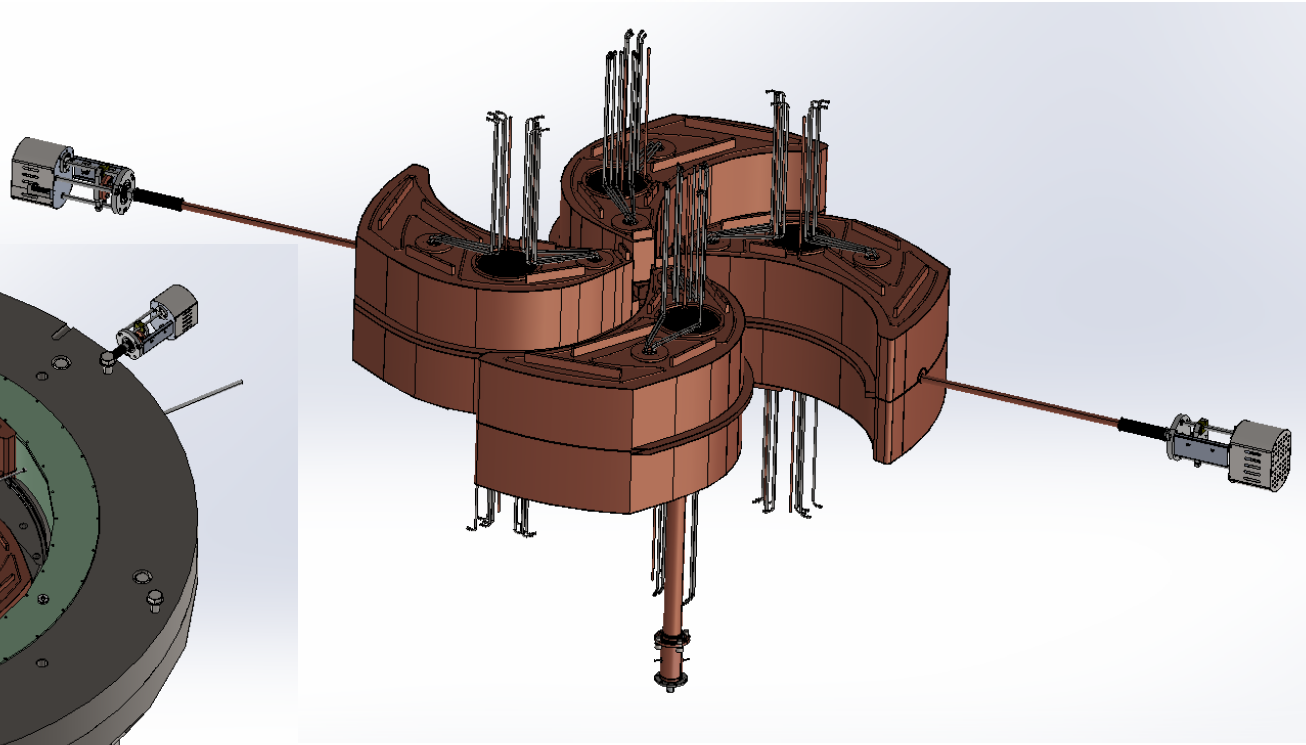

MSC230 Extraction system

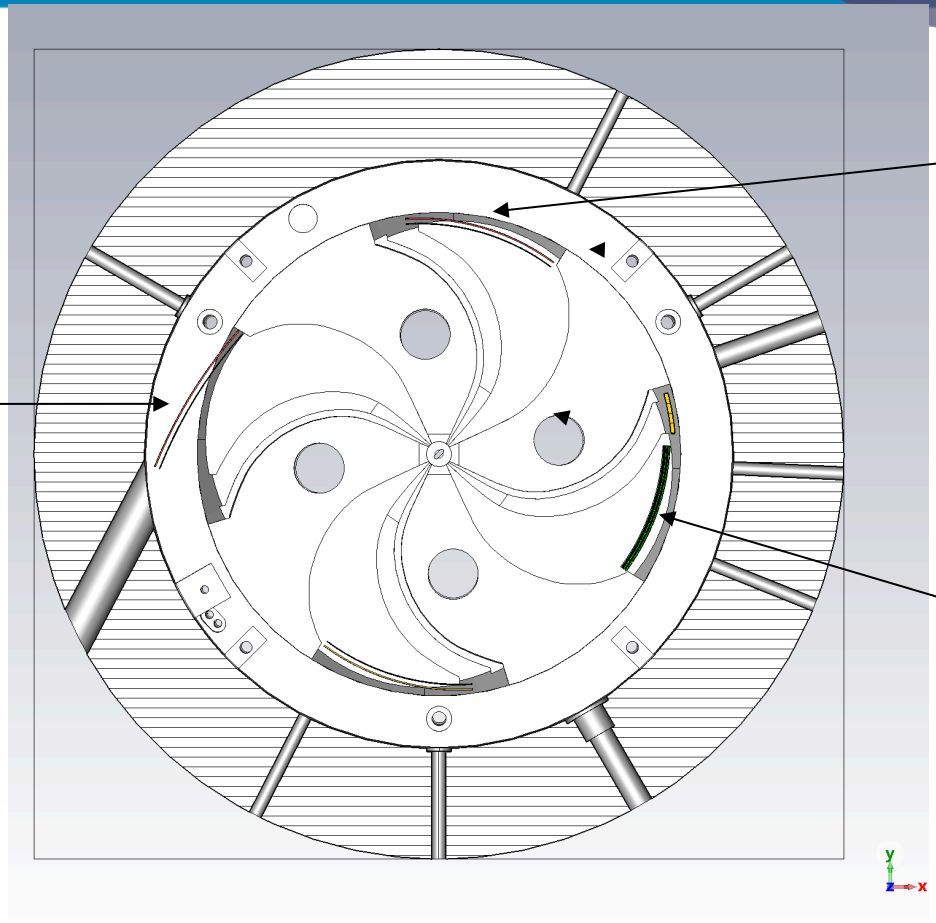

MSC230 ESD

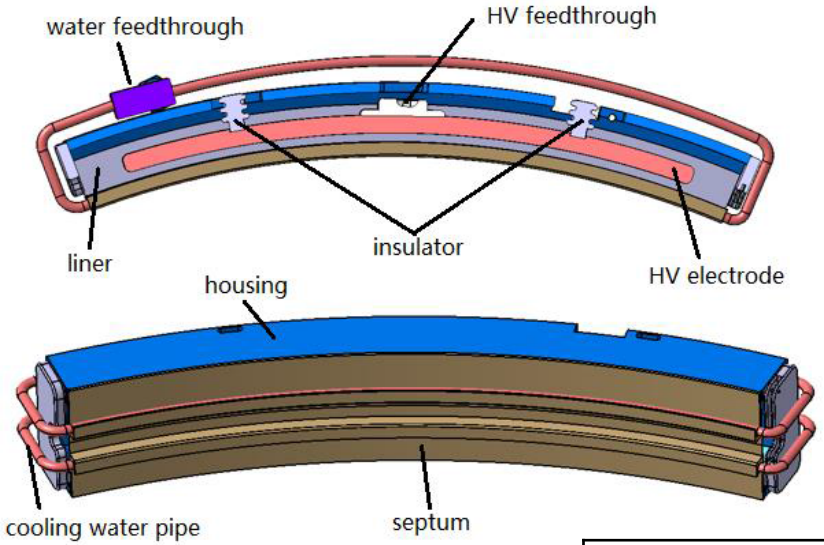

Azimutal length, °	34
length, m	0.65
Nominal gap, mm	5
Septum thickness, mm	0.1
Cathode voltage, kV	50
Nominal electric field strength, kV/cm	90
Maximum electric field strength, kV/cm	100

MSC230 ESD



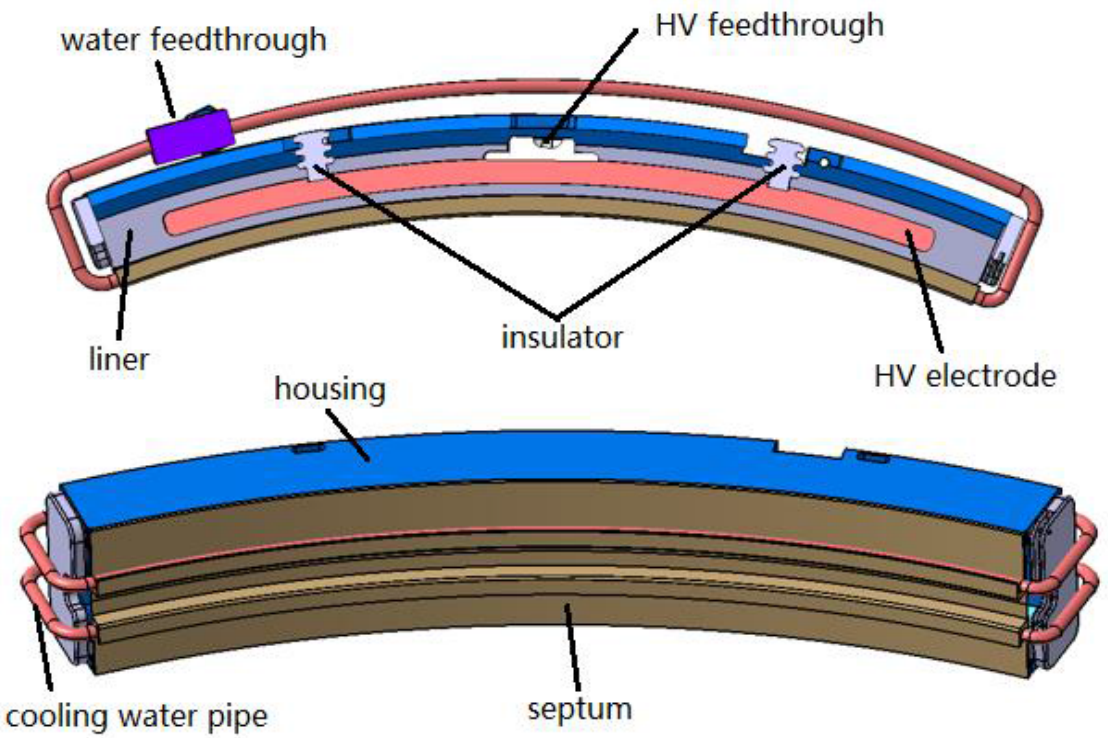
water feedthrough
HV feedthrough
liner
insulator
HV electrode
housing
cooling water pipe
septum

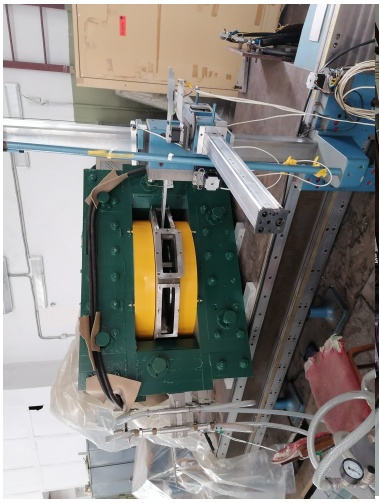



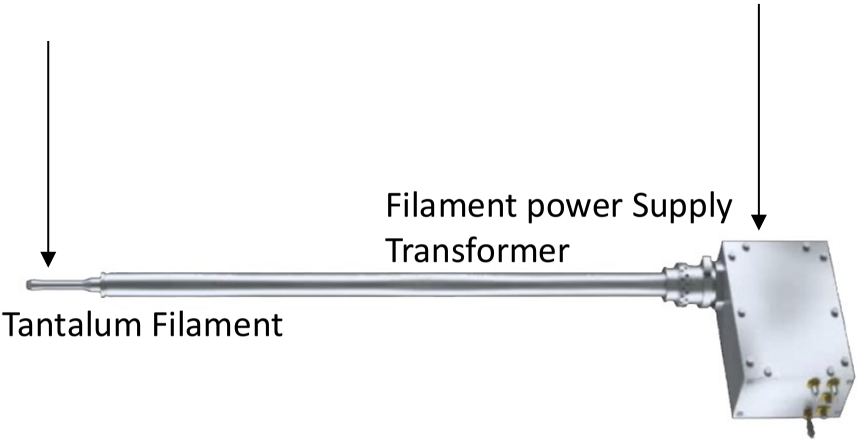
Filament power Supply
Transformer
Tantalum Filament

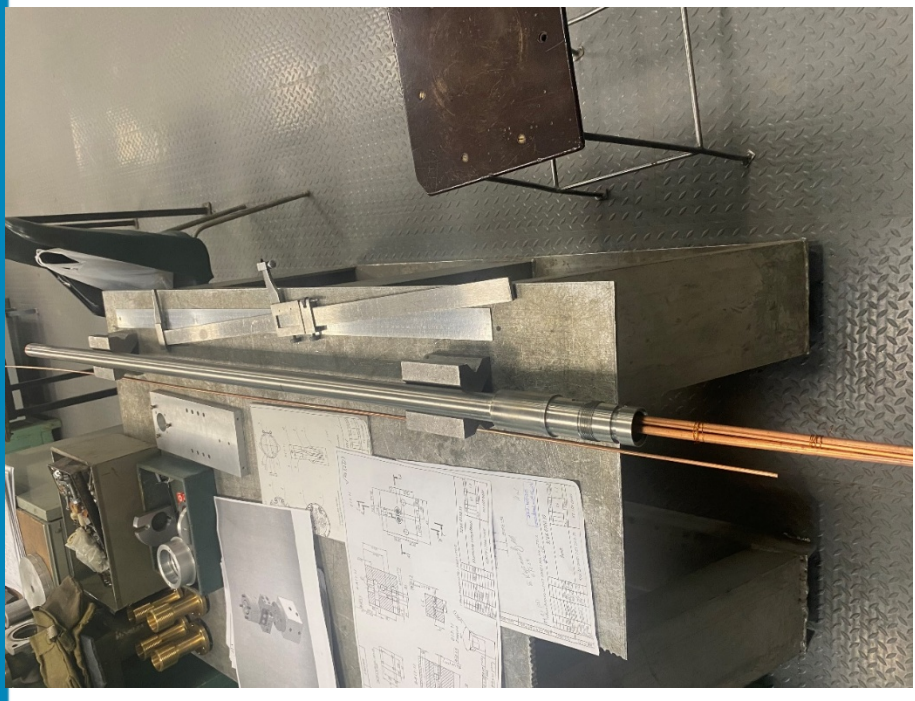

MSC230 vacuum pumps

	Oil Diffusion Pump	Cryopump	Turbo Molecular pump
Long time without maintain	√		√
Minimized pipe length		√	√
pump size	large	middle	small
System cost	$	$$$	$$
Starting time	⏱⏱	⏱⏱⏱	⏱
Weakness	Oil back streaming	regeneration	Magnet shield

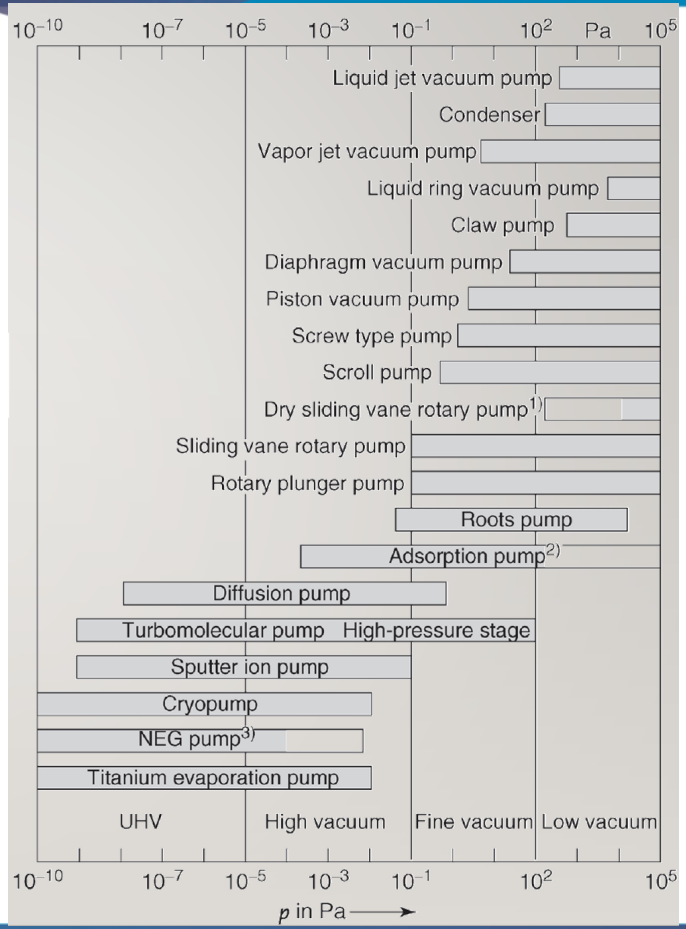

MSC230 vault



IBA-JINR C235-V3

MSC230 vault layout

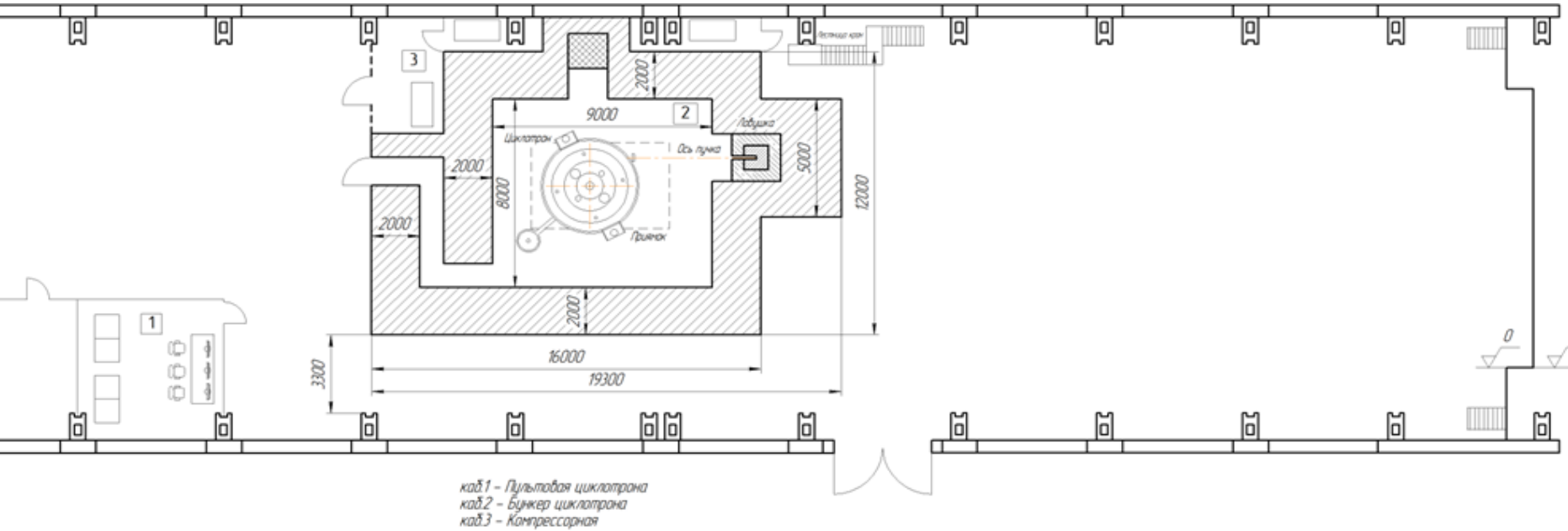

END OF PART 1

RF cavity (technical model)

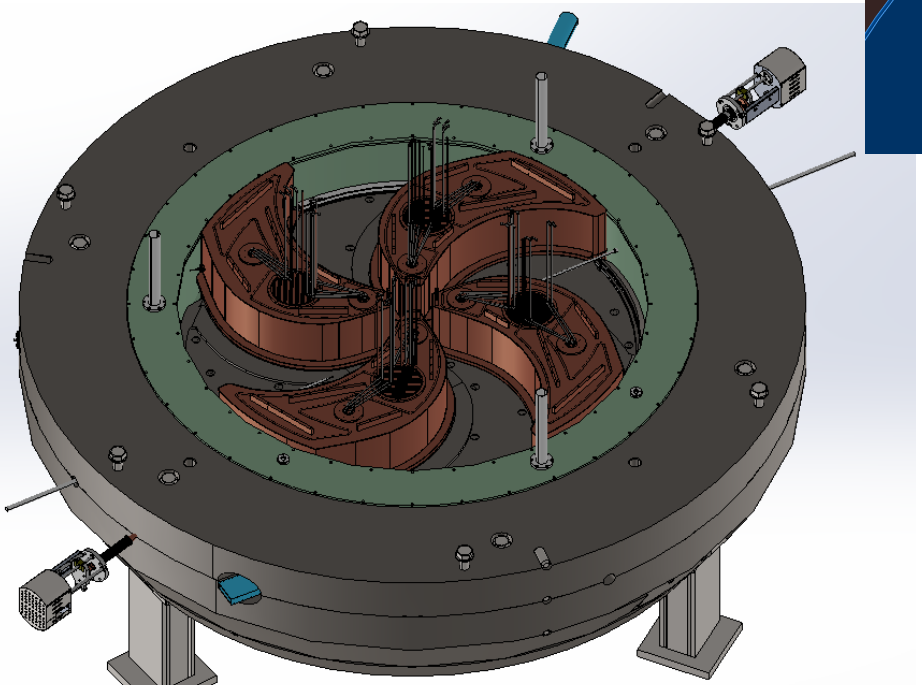

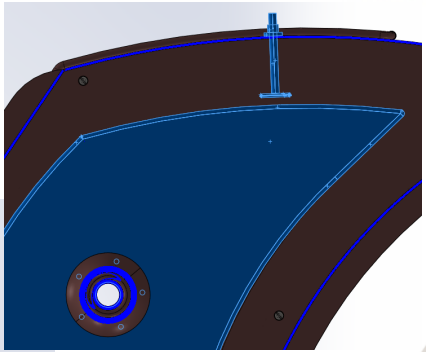

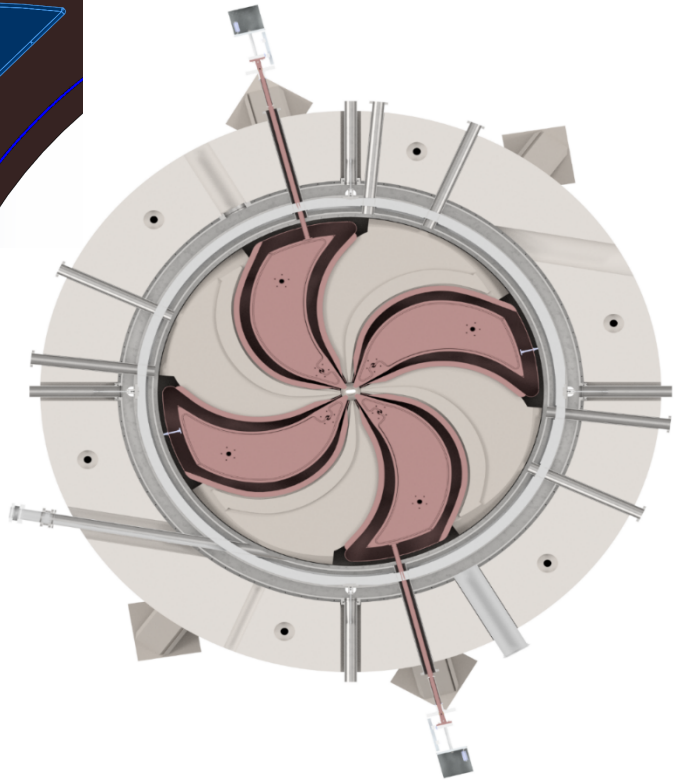

RF cavity (technical model)

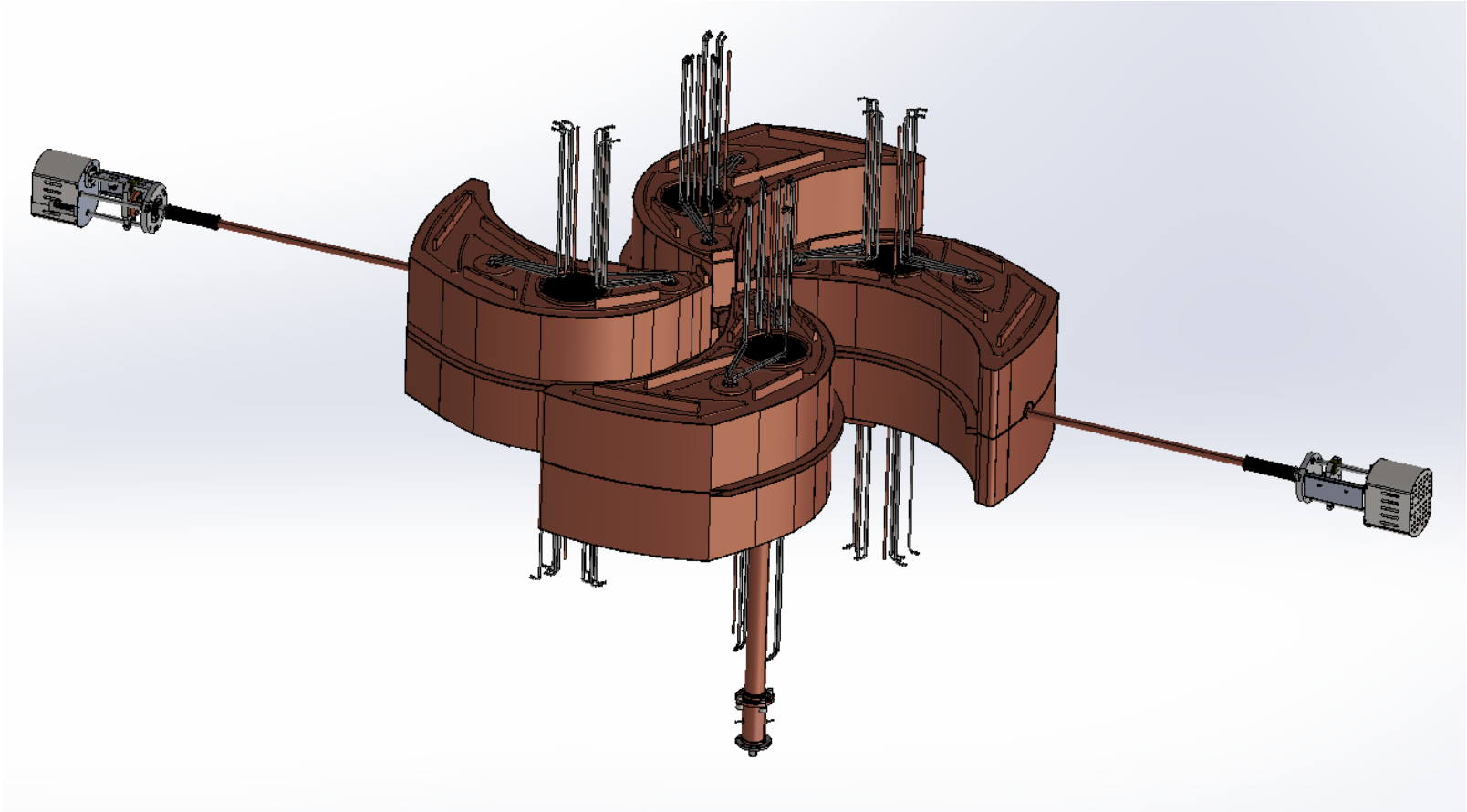

RF cavity (technical model)

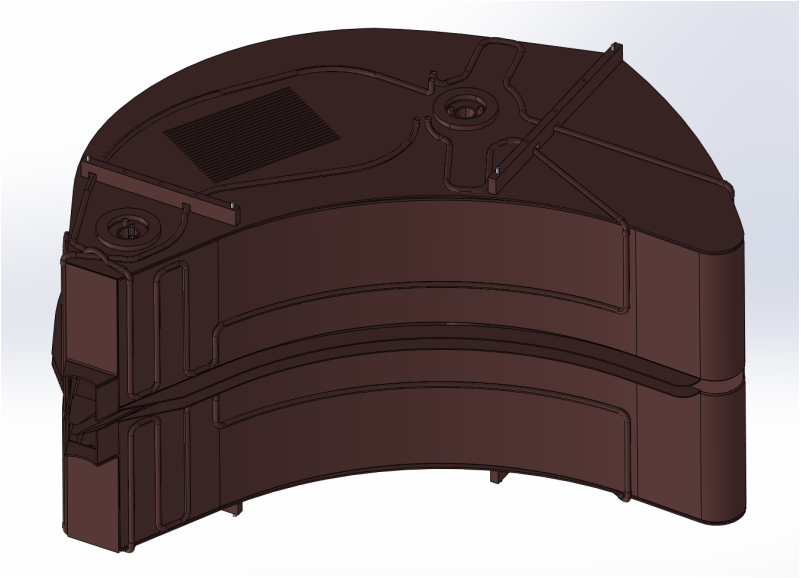

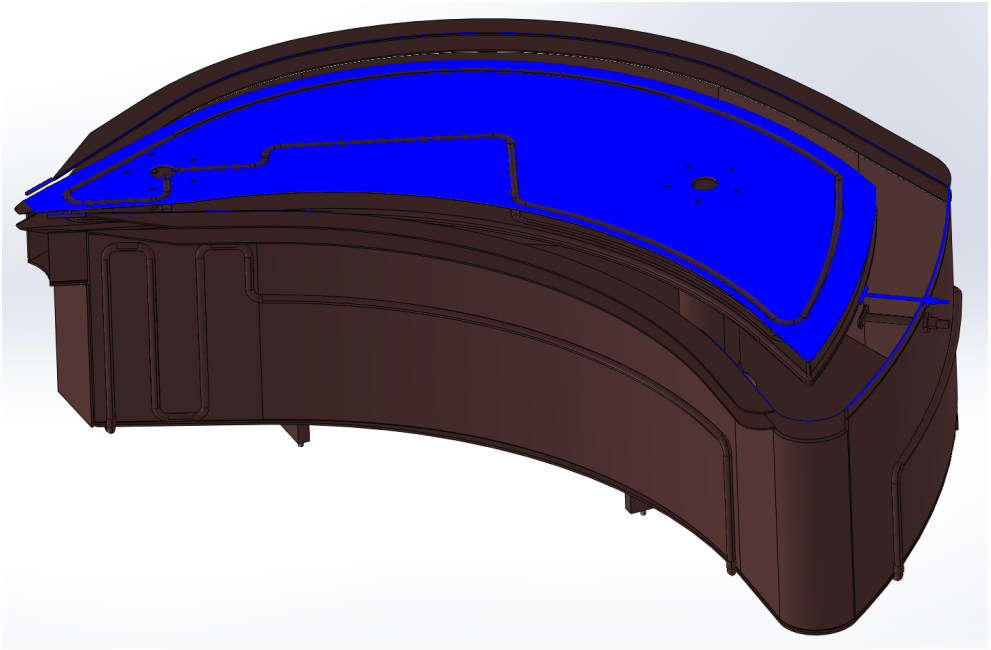

RF cavity (simulation model)

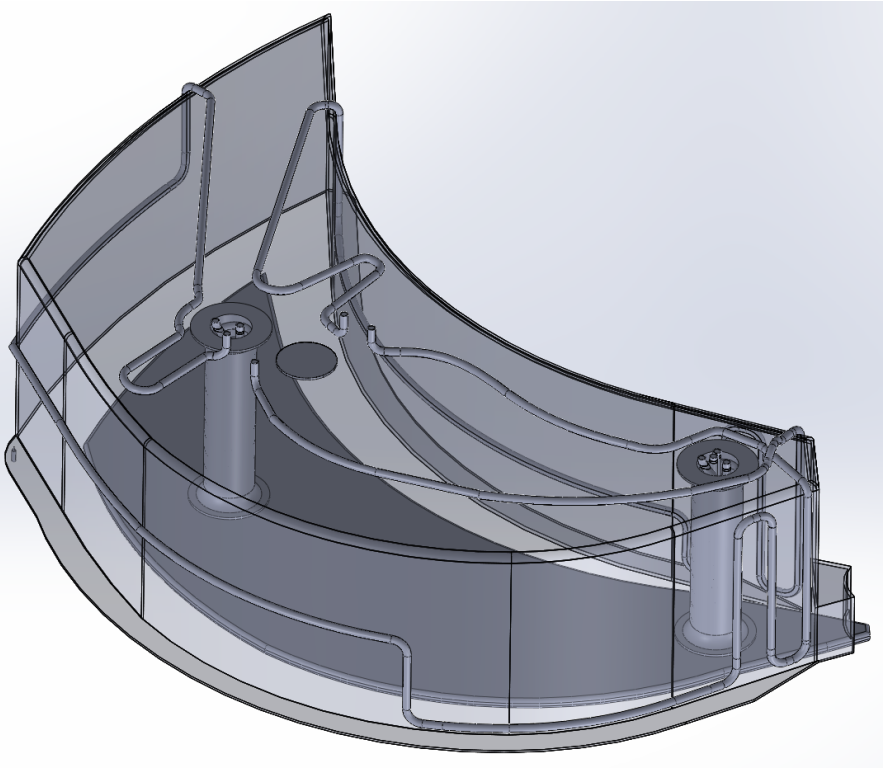

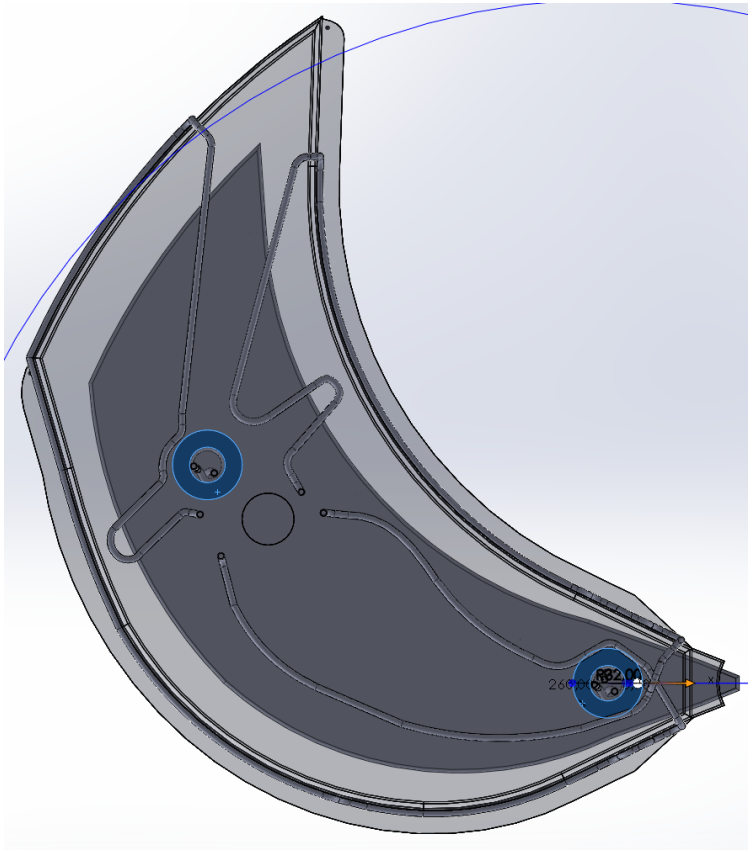

RF cavity main parameters

- **The resonance of a cavity can be understood as simple parallel resonant circuit described by *R*, *L*, *C***

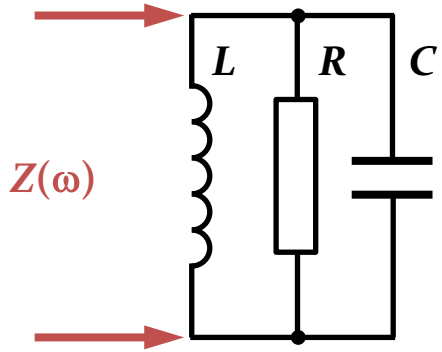

In a resonant cavity, energy continuously oscillates back and forth between the electric-field-dominated region (C) and the magnetic-field-dominated region (L), just as it does in an LC tank circuit.

$$Q = \omega_0 \frac{\text{Stored energy}}{\text{Average power loss}} = \frac{\omega_0 E}{P}$$

$$E = \frac{1}{2}CV^2 = \frac{1}{2}LI^2$$

$$P = \frac{1}{2}\frac{U^2}{R} = \frac{1}{2}I^2 R$$

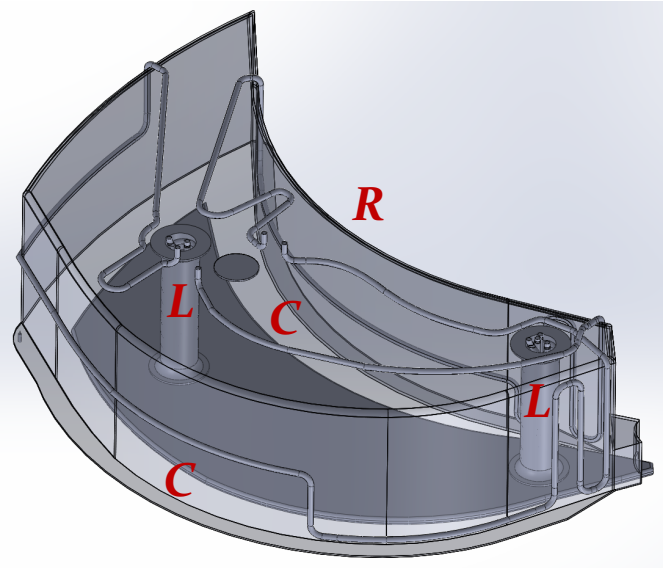

RF cavity main parameters

- **During cavity design :** Q, W_0, *R*, *R/Q*

Resonance frequency, w_0 is exactly defined, e.g. hw_{rev}

Shunt impedance, *R* Power required to produce a given voltage without beam

$$\mathbf{Rs} = \frac{(Vacc)^2}{Ploss}$$

R over Q (*R*/*Q*) Defined purely by a geometric property of the cavity shape

More deep a bit later…

Power

$$P(dB) = 10\ Log_{10}\left(\frac{P_1}{P_2}\right)$$

$$P(dBm) = 10\ Log_{10}\left(\frac{P}{1mW}\right)$$

P1/P2	dB value
1 000 000	60 dB
1000	30 dB
100	20 dB
10	10 dB
2	3 dB
1	0 dB
0.5	-3 dB
0.1	-10 dB
0.001	-30 dB

0 dBm = 1 mW
10 dBm = 10 mW
20 dBm = 100 mW
30 dBm = 1 W
33 dBm = 2 W
60 dBm = 1 kW
90 dBm = 1 MW

dB (decibels) — this is not an absolute unit, but a relative one. It shows how many times one quantity is greater or less than another, but expressed on a logarithmic scale.

dBm is already an absolute unit of power measurement. She answers the question "How much?".

RF function diagram






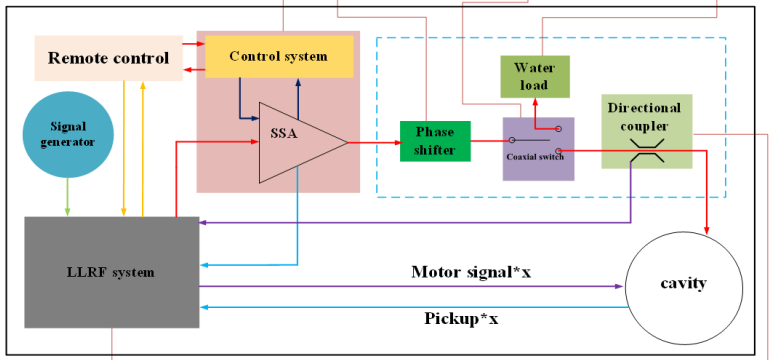




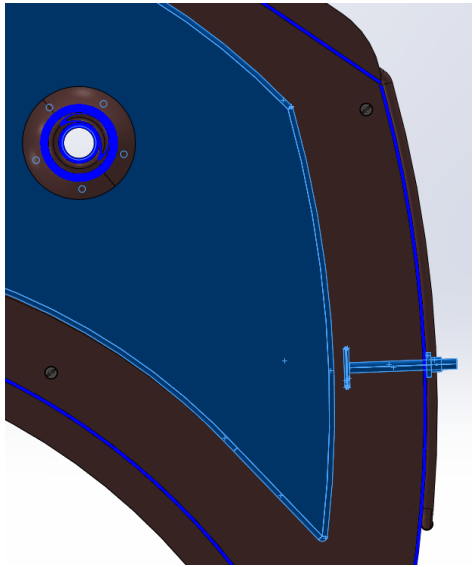

The function of the RF system is to generate a stable accelerated electric field, including a signal generator, a low-level system, a power amplifier and a transmission system. The transmission system mainly includes the feeders, a phase shifter, a coaxial switch, a directional coupler, a water load.

function schematic diagram (3d)

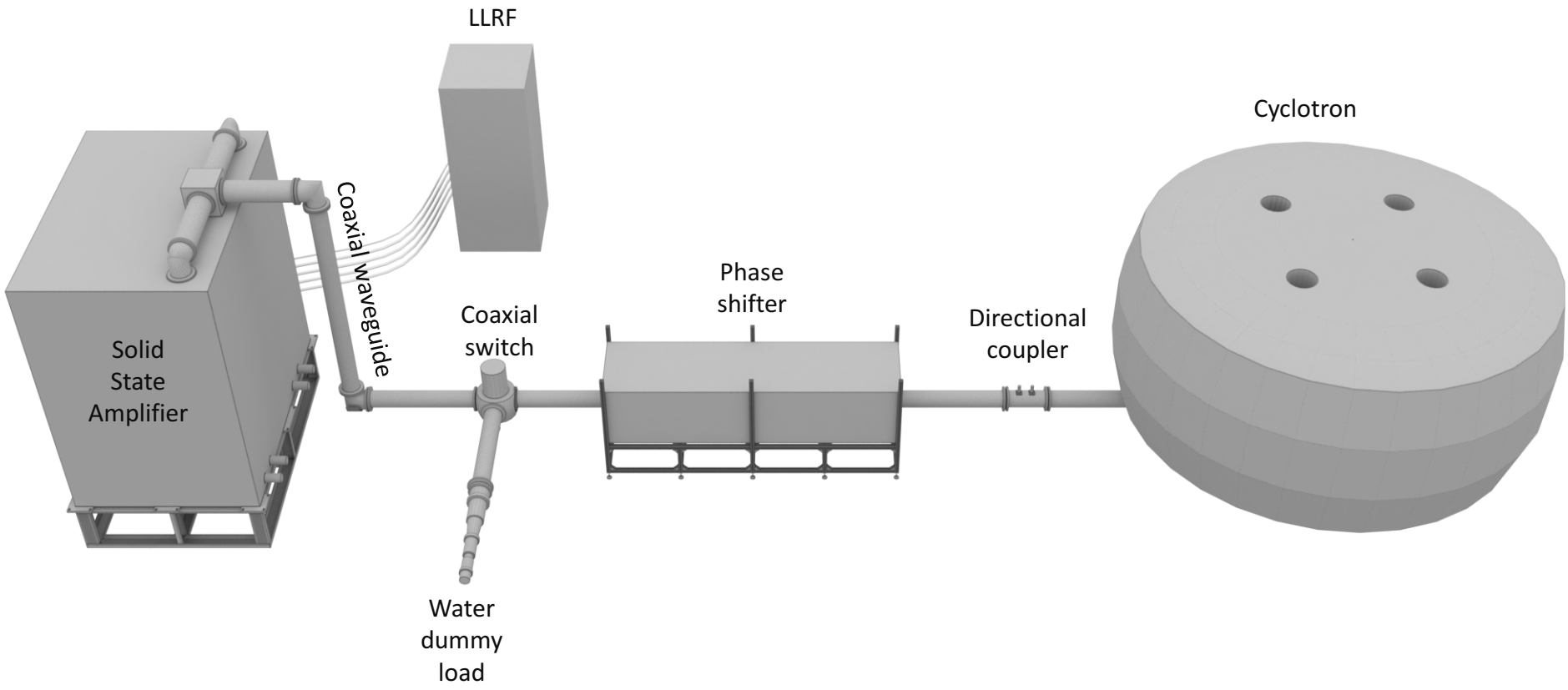

function schematic diagram

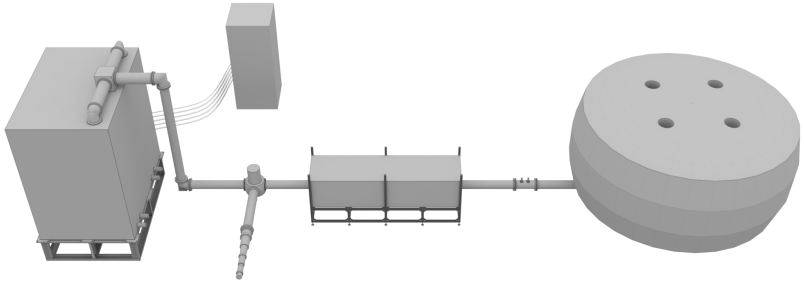

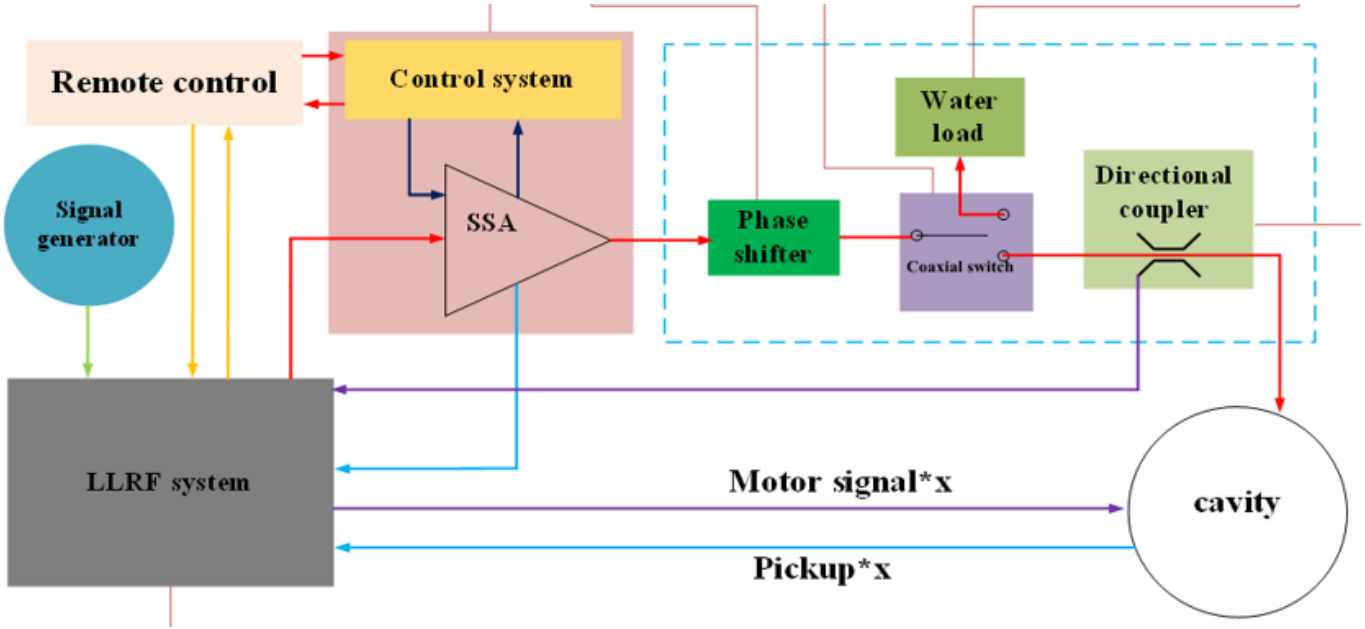

LLRF



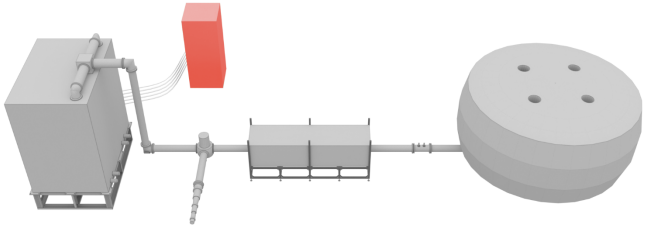

Sparks and discharges inside the cyclotron cavity or inside the RF coupling window generate high reflected power, higher order modes and strong rising voltage peaks on the inner conductor of the coaxial distribution system. This can damage the amplifier, the coupling window or even the cyclotron itself. To detect and avoid these dangerous conditions as fast as possible the digital LLRF system has a sophisticated event handling and protection system.

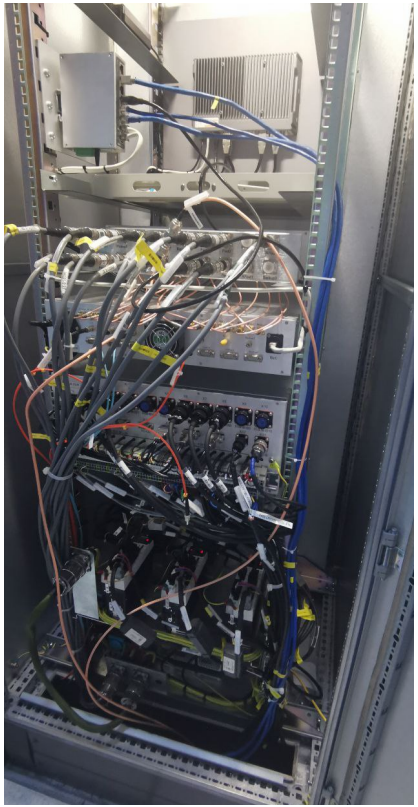

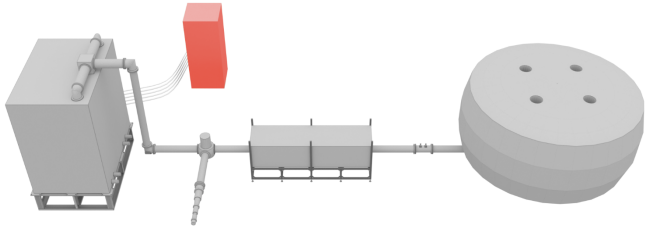

Feedback loop and tuning

The digital LLRF system provides 3 different feedback loops to keep the field inside the cyclotron stable for operation:

- The first one is a fast **amplitude** loop to compensate fast distortions.
- The second feedback loop keeps the **phase** of the field in the cavity to the desired value.

The other two feedback loops control the tuners using the four tuner interfaces of the LLRF.

- **The resonance frequency** loop controls the resonance frequency of the cyclotron.

Interlock protection Logic of LLRF

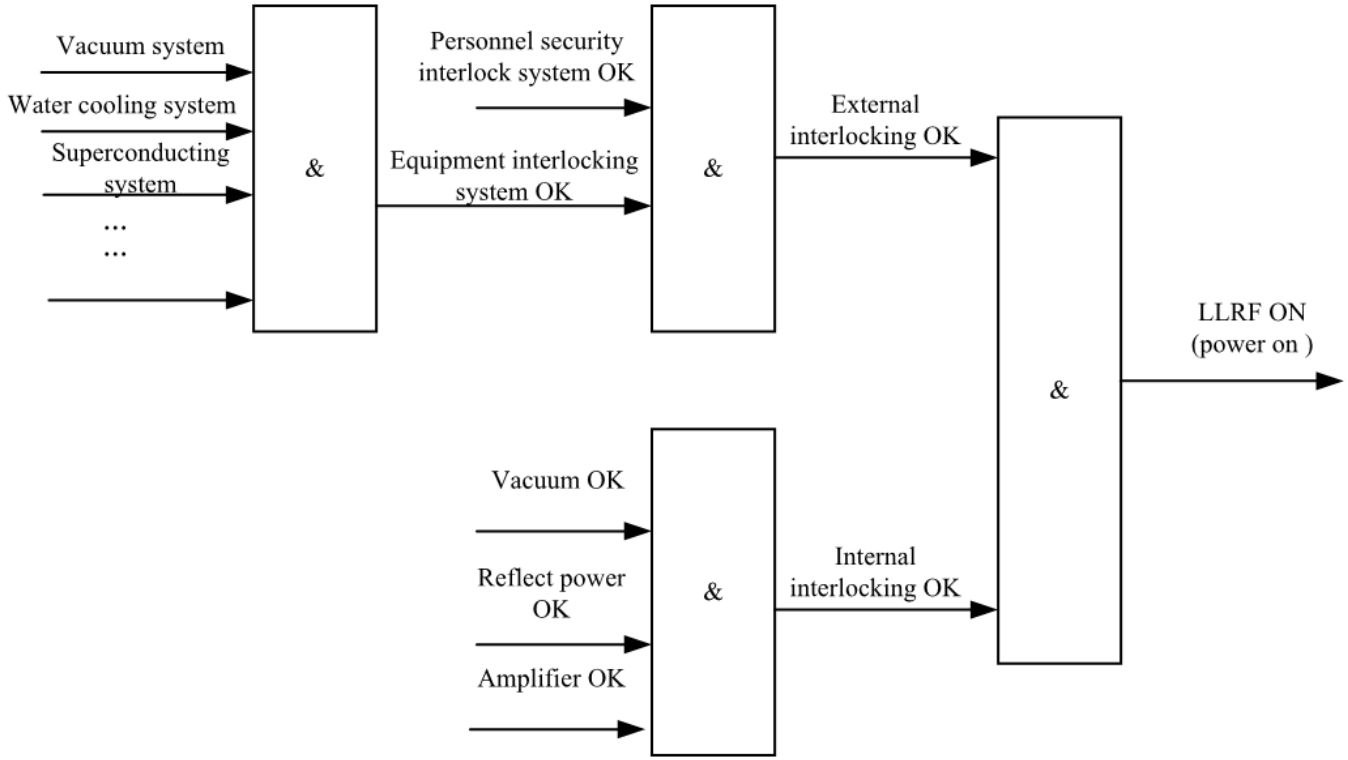



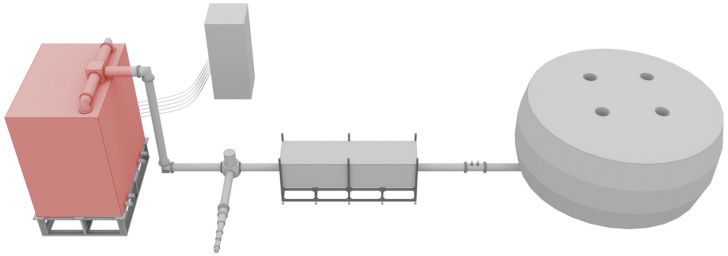

Amplifier: The solid-state power source amplifies the output signal of the low-level RF system to 100 kW and feeds it into cyclotron.

SSA

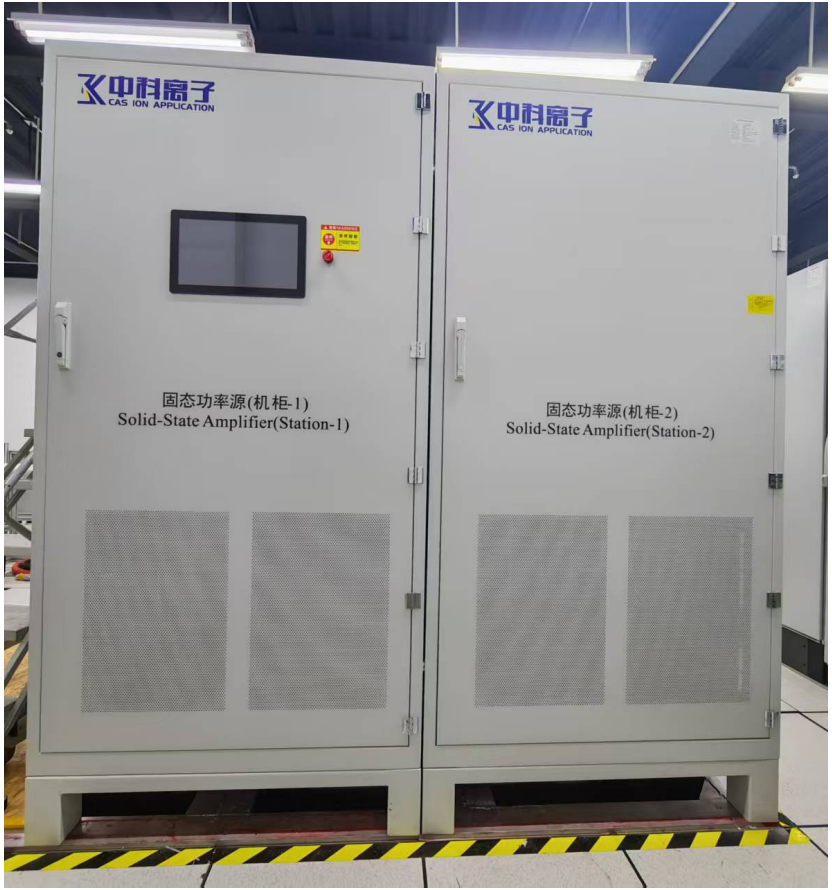
中科离子
CAS ION APPLICATION
固态功率源(机柜-1)
Solid-State Amplifier(Station-1)
中科离子
CAS ION APPLICATION
固态功率源(机柜-2)
Solid-State Amplifier(Station-2)

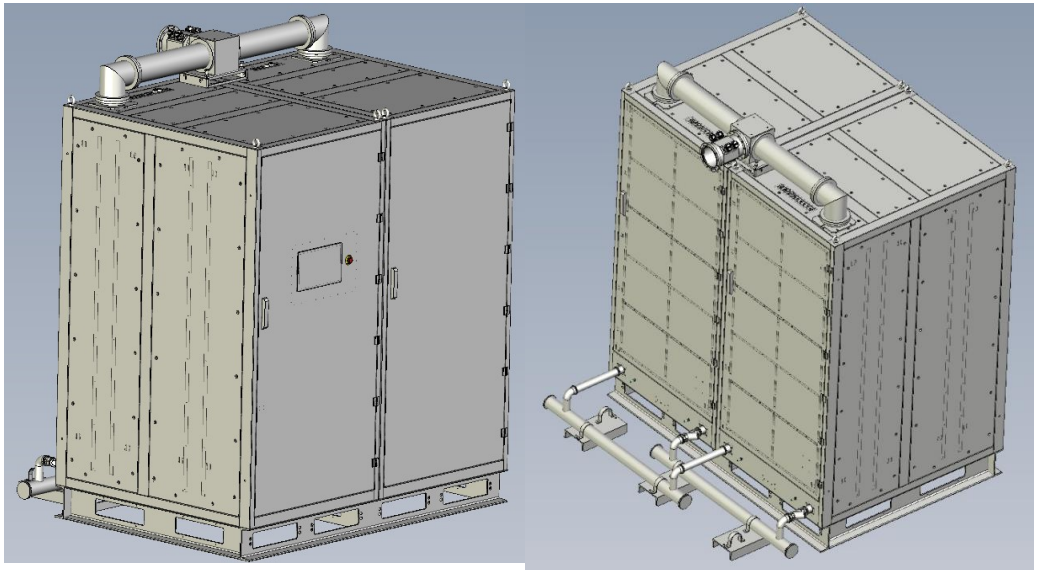

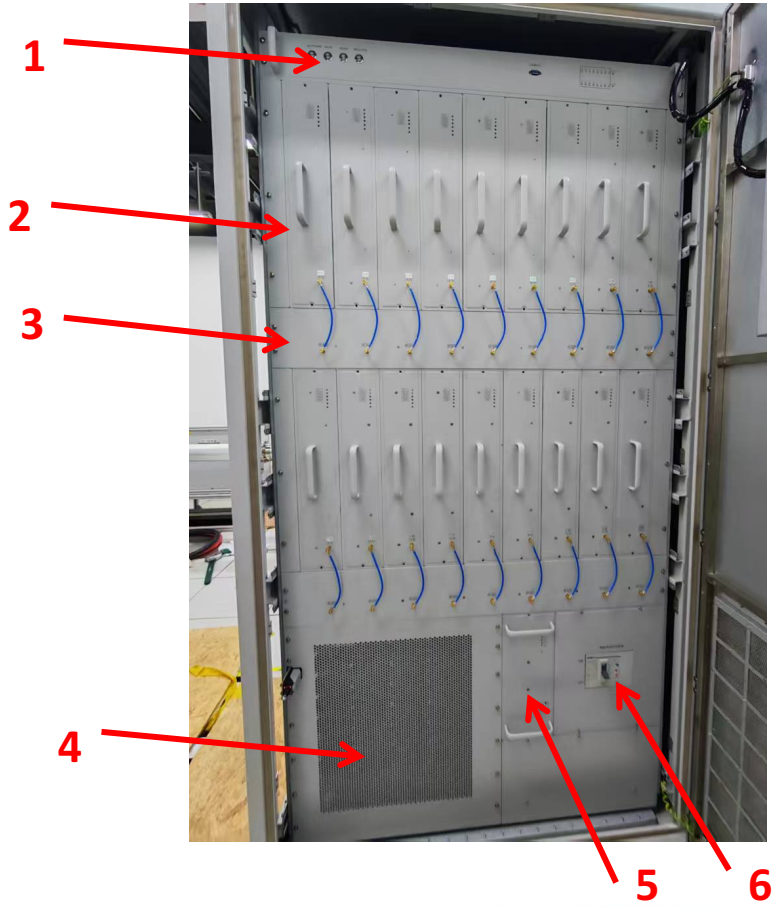

1-System Controller

2-Final-stage Amplifier Module

3-1:9 Power Splitter

4-Power Supply Module

5-Pre-amplifier Module

6-Air Circuit Breaker

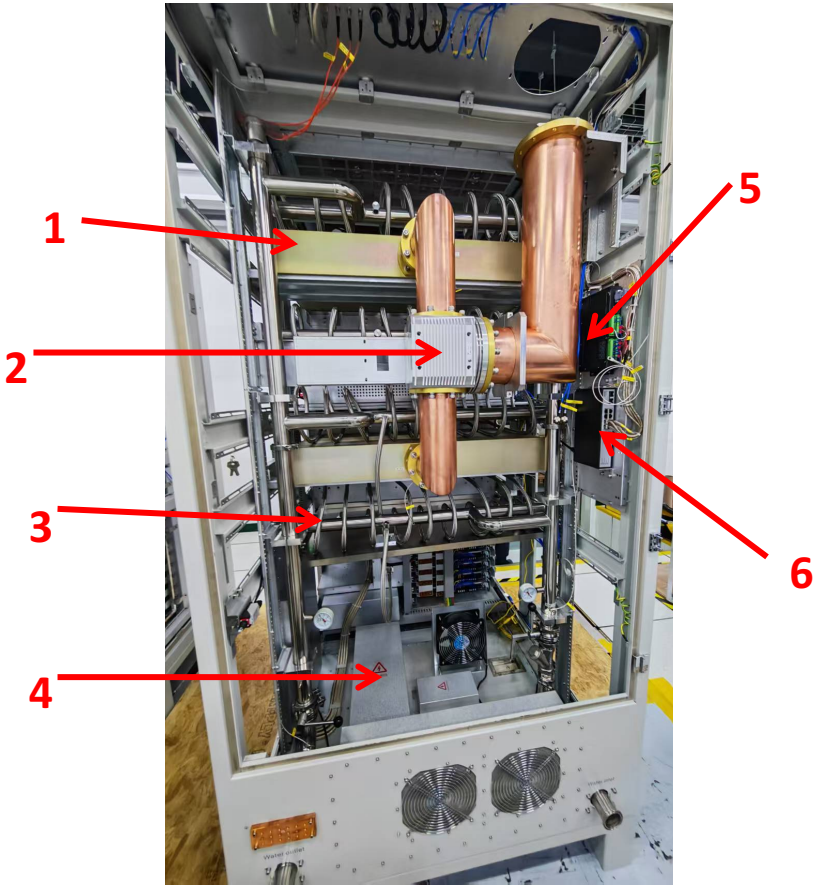

1-9:1 Combiner

2-2:1 Combiner

3-Water Cooling System

4-Bottom Cable Entry

5-Temperature Acquisition Unit

6-Network Switch

Interlock protection Logic of SSA

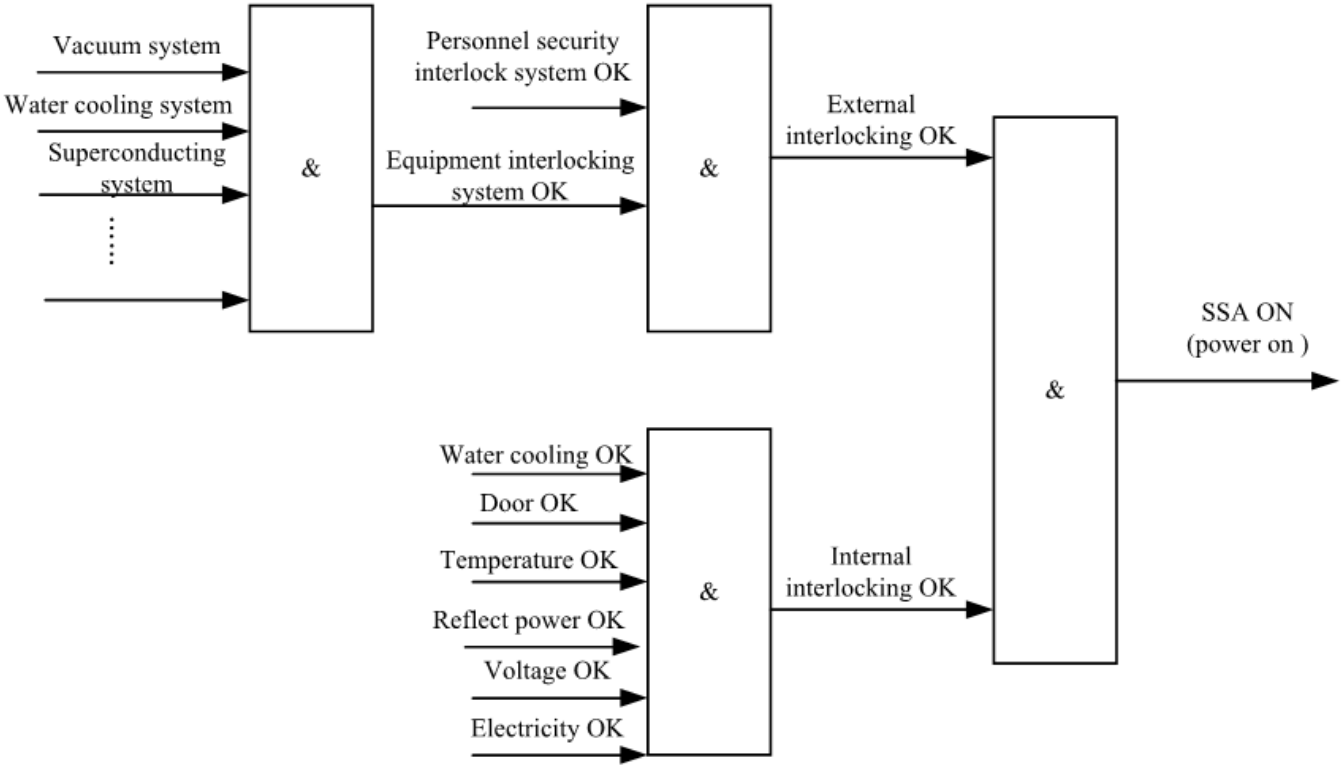

Transmission system 6-1/8 inch coaxial waveguide

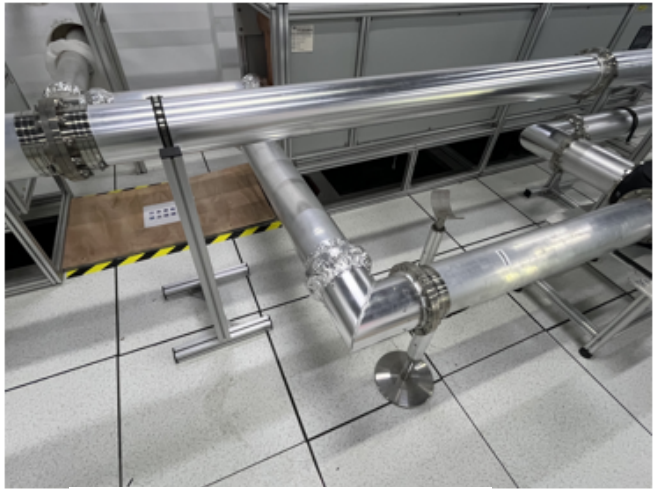

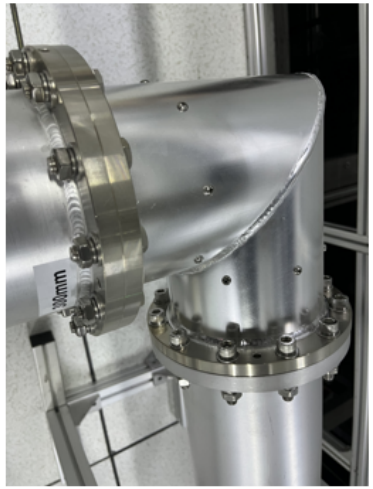

Characteristic impedance

$$Zc = \frac{60}{\sqrt{\varepsilon r}} ln\left(\frac{D}{d}\right)$$



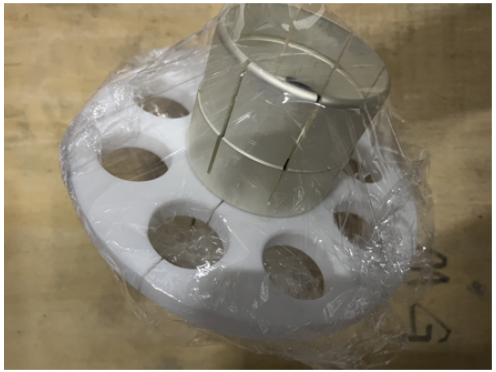

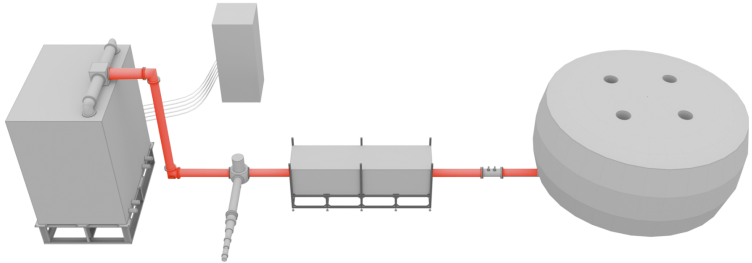

Coaxial Switch / Dummy load

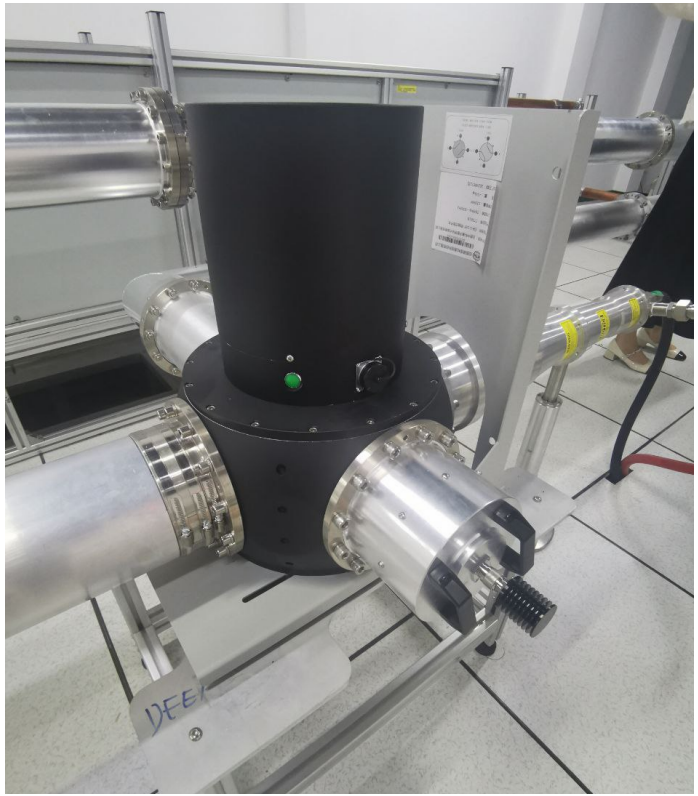

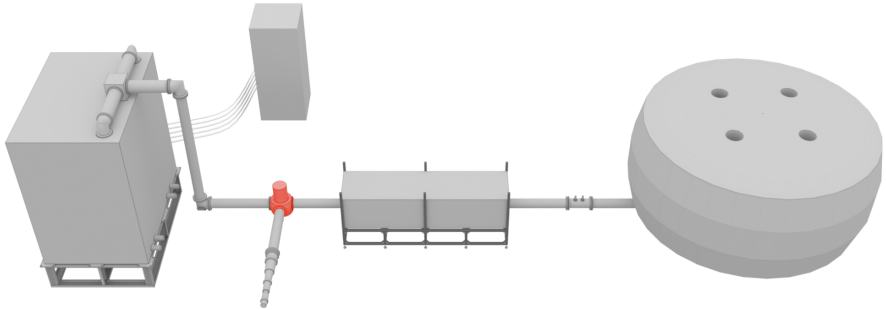

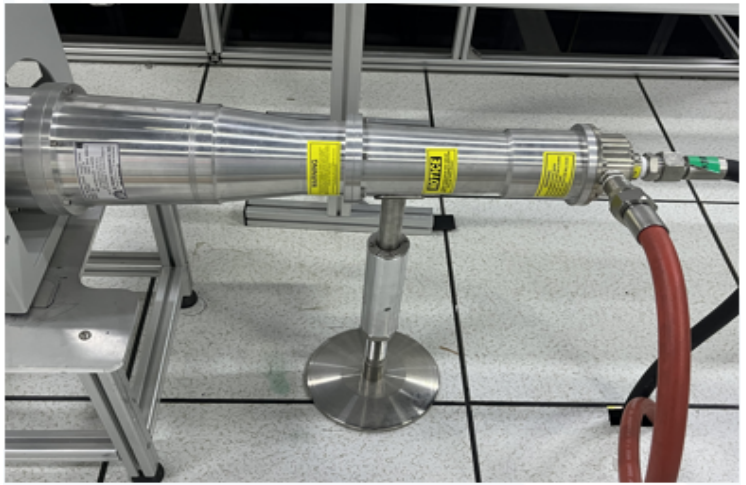

Coaxial Switch: It is used to switch power to water load or cyclotron.

Phase Shifter





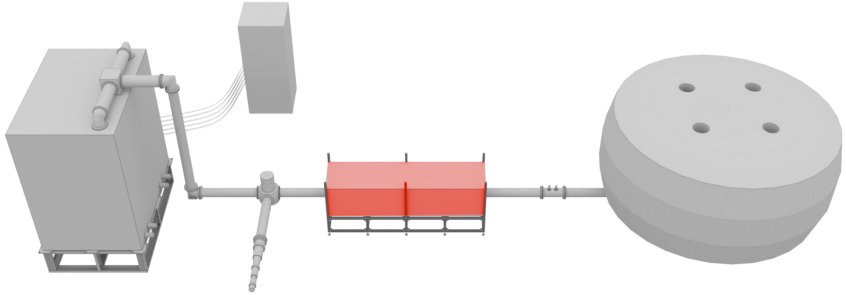

It is used to protect the amplifier when the reflected power is bigger than the threshold.

Transmission line

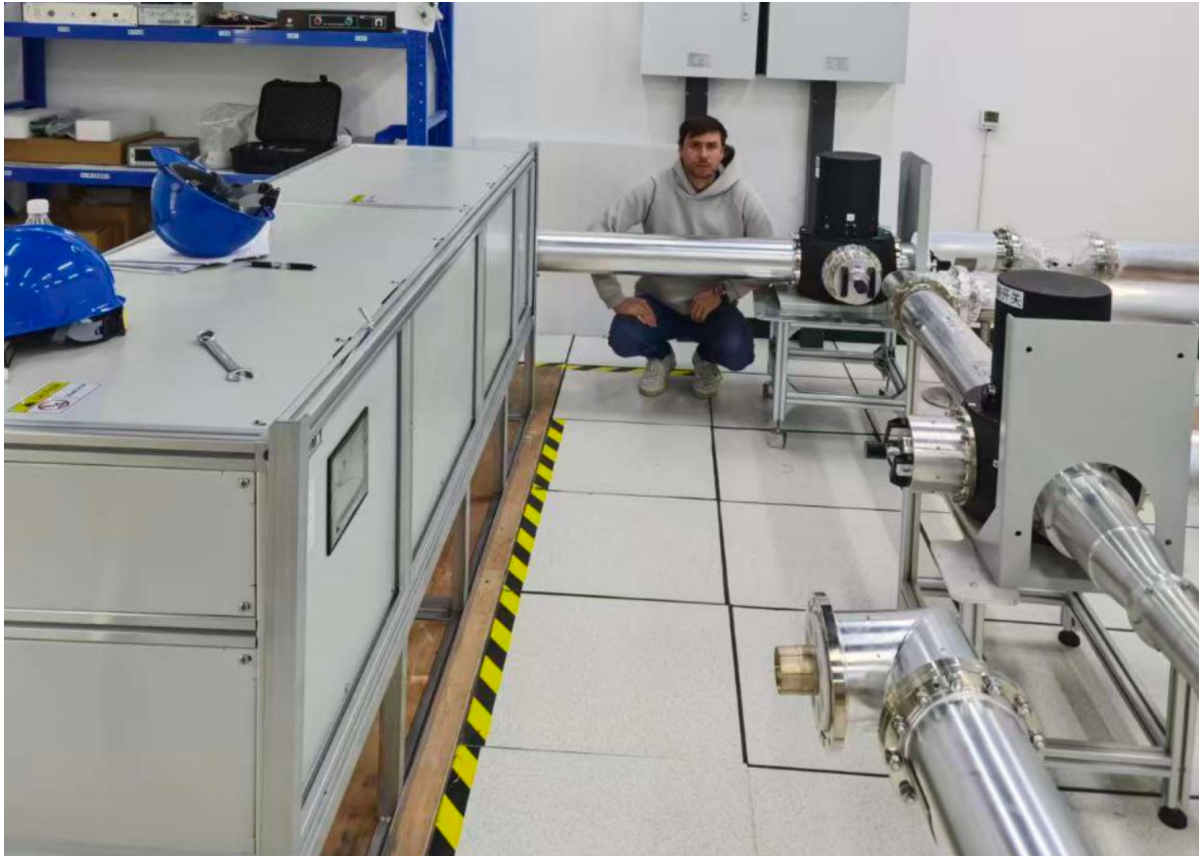

Directional coupler

It is used to monitor the forward power and the reflected power.

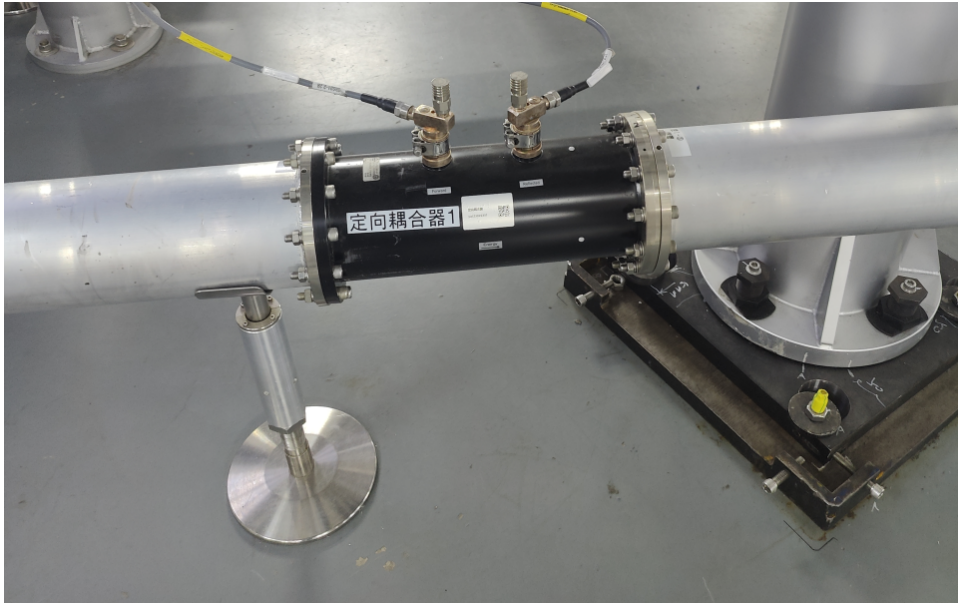



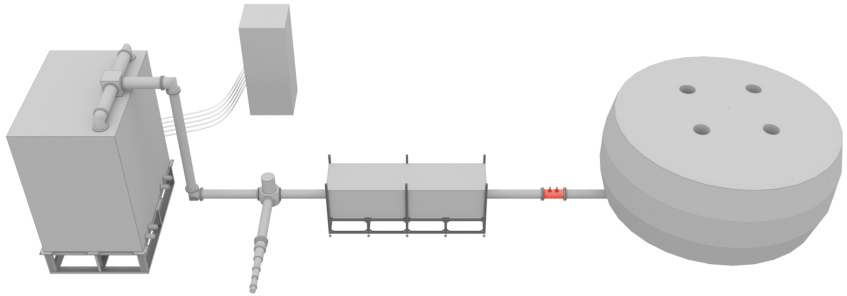

Transmission line – power transfer

- The way to connect the RF cavity is through a Transmission Line
- Transmission of RF power up to tens of kW
- During power transfer : low loss, low reflections

- **If L / λ << 1 (e.g., < 0.01 or 0.1)**, you are in the **lumped element** regime. Transmission line effects can be safely ignored. This is the domain of standard low-frequency circuit analysis.
- **If L / λ > 0.1 or so**, you are in the **distributed element** regime. Transmission line effects must be considered.
- The wavelength at 50 Hz is 6'000 km. the transmission line in this case is 3/6'000'000 = 0.0000005 wavelengths long, This is *extremely* short. The voltage and current at the source (the circuit breaker) and at the load (lamp, for example) are effectively **in phase and identical at every point along the wire** at any instant in time. A wave simply doesn't have "room" to develop.

•**Electrical Length = L / λ**

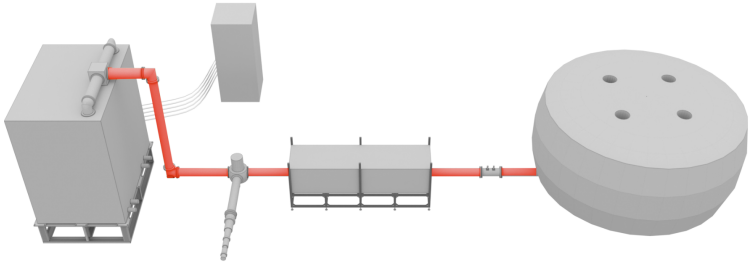

Transmission Line Effect is the phenomenon where the wire's connecting components **stop being simple, perfect conductors and instead behave like distributed circuit elements with a finite signal travel time.** This becomes critical when the size of the circuit becomes comparable to the wavelength of the signal.

Transmission line

Characteristic Impedance (Z_0)

- This is the most important property. It's the impedance that a wave "sees" as it travels down the line. It's determined by L and C: $Z_0 = \sqrt{(L/C)}$. For a line to be efficient, the source, the line itself, and the load must all have the same impedance (e.g., 50Ω).
- If the impedance of the load (**Z_L**) does not match the characteristic impedance of the line (**Z_0**), the wave cannot fully transfer its energy into the load.
- Part of the wave is **reflected** back towards the source.
- The forward and reflected waves interfere with each other, creating a **standing wave** pattern along the line.
- This is measured by the **Voltage Standing Wave Ratio (VSWR)**, a key parameter in your amplifier report. A high VSWR means high reflection and poor power transfer.

Impedance transform

Characteristic Impedance of a Transmission Line (Z_0)

$$Z0 = \sqrt{\frac{L}{C}}$$

- But how to transform one impedance Z(l) to another value Z (in) at a specific frequency ? The quarter wave ($\boldsymbol{\lambda/4}$)transformer is used !

$$Z(in) = \frac{Z0^2}{Z(l)}$$

- **At resonance ($\omega_0 = 1/\sqrt{(LC)}$): `Z_cavity = R` (purely real and maximum).**

- This high R is transformed down to 50Ω using a coupling loop (transformer) or other matching network.

Coaxial cable

- **Coaxial lines** often used for power RF transmission and connection of RF components
- **Frequency Range:** They have no lower cutoff frequency, unlike waveguides. A rectangular waveguide capable of efficiently transmitting this frequency would be impractically large (~over 1 meter wide).
- **Power Handling:** The primary limitation is **voltage breakdown**, not heating. (next slides)
- **Interface and Integration:**
  - **Solid-State Amplifiers:** Your amplifier is built from many solid-state transistor modules. These modules naturally have coaxial output ports (like N-connectors). Combining their outputs and connecting to the cavity is most straightforward with coaxial lines.
  - **Coupling:** the **coupling loop (transformer)** is the standard and most effective way to excite a cyclotron cavity. A coaxial line terminates perfectly into a coupling loop. It's simple to construct and tune. (later)
- **Mode of Operation:** Coaxial lines naturally support a **Transverse Electromagnetic (TEM) mode**. The TEM mode has no cutoff frequency and provides a uniform field pattern, which is simple and predictable for power transfer.

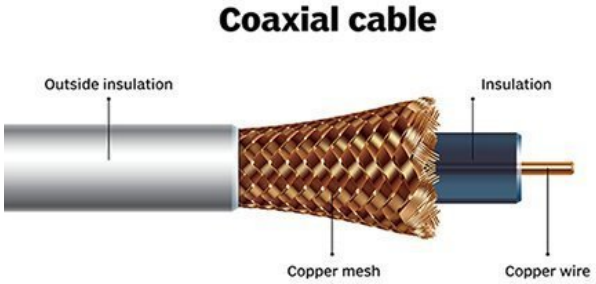

Other types of waveguides

Waveguides (rectangular, cylindrical, elliptical)

Rectangular, cylindrical : At much higher frequencies (e.g., 10 GHz and above), where the wavelength is a few centimeters. Then, waveguides become compact and are more efficient than coaxial lines, with lower loss and higher power handling *for their size*.

Eleptical: flexible version of a rectangular waveguide, ability to be bent. Used for making complex connections between rigid waveguides in systems where alignment is difficult

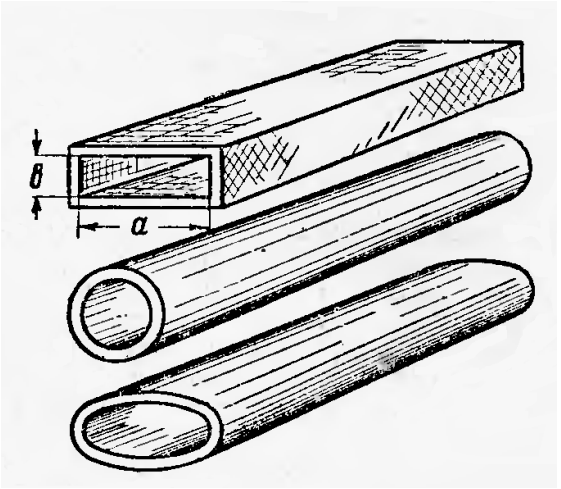

Coaxial transmission line

- Characteristic impedance is

$$Zc = \frac{60}{\sqrt{\varepsilon r}} ln\left(\frac{D}{d}\right)$$

D, d - outer and inner dimension of the conductor

εr = dielectric characteristic of the medium

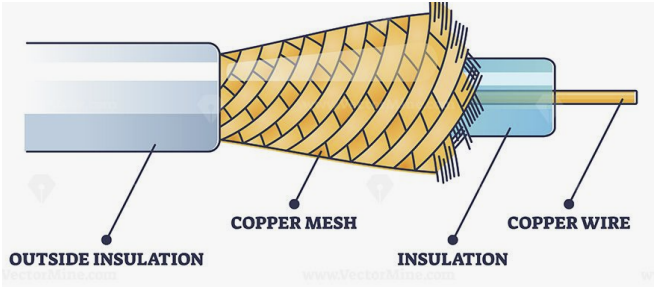

For 50 Ohm

Size	Outer conductor		Inner conductor	
	Outer diameter	Inner diameter	Outer diameter	Inner diameter
7/8"	22.2 mm	20 mm	8.7 mm	7.4 mm
1 5/8"	41.3 mm	38.8 mm	16.9 mm	15.0 mm
3 1/8"	79.4 mm	76.9 mm	33.4 mm	31.3 mm
4 1/2"	106 mm	103 mm	44.8 mm	42.8 mm
6 1/8"	155.6 mm	151.9 mm	66.0 mm	64.0 mm

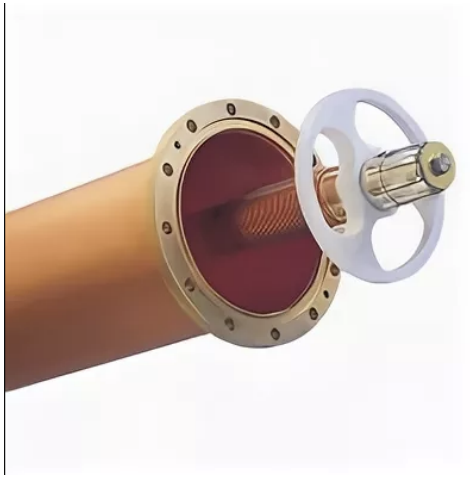

Rigid lines are made of two rigid tubes maintained concentric with supports

Skin depth

- RF needs only few µm of good electrical layer to flow along
- The crucial takeaway: Skin depth is inversely proportional to the square root of the frequency

- at the surface, conductivity is 100%
- at one skin depth, it is decreased to 36.8%

The skin effect is a direct consequence of **Faraday's Law of Induction** and **Lenz's Law**.

$$\delta = \sqrt{\frac{\rho}{\pi f \mu}}$$

δ = skin depth in which 63 % of the current flows
ρ = resistivity of the conductor
µ = permeability of the conductor, for copper 4 π x 10E−7 H/m
For f=106.5 MHz : δ=6.4 µm

Any oxidation, corrosion, or poor mechanical contact at connectors (like your N-type or 6-1/8 inch interfaces) can drastically increase resistance and cause localized heating

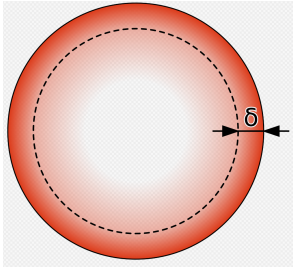

RF current is flowing through only the first layers of a plain cable

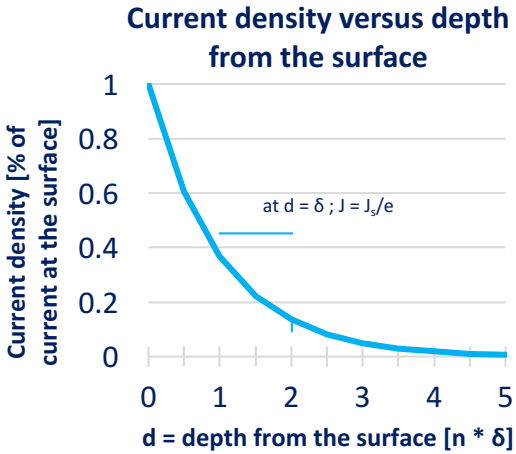

This means at 106.5 MHz, 63% of the current flows within a layer only 6.4 micrometers (0.0064 mm) thick on the surface of the conductor!

This leads to **Ohmic Losses (I^2R Losses)**, which turn into heat. Your cooling system must handle this.

Because current flows in such a thin layer, the **surface roughness** of the conductor becomes incredibly important.

Skin depth

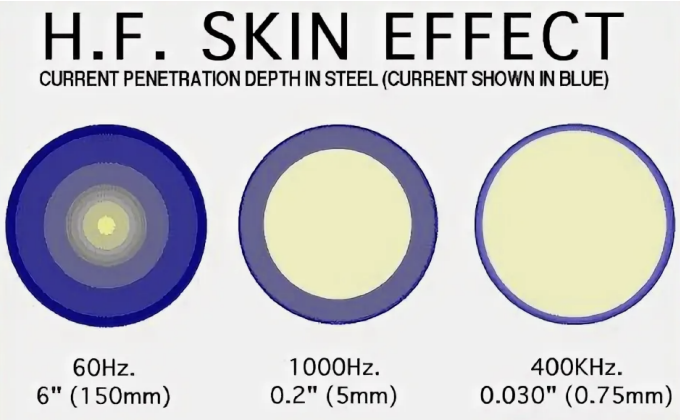

material	P [nΩm]	μ_r	δ @ 200 MHz [μm]	5 x δ @ 200 MHz [μm]
Gold	24.4	1	5.56	27.8
Silver	15.9	1	4.49	22.5
Copper	17.2	1	4.67	23.4
Aluminium	28.2	1	5.97	29.9
Tin	109	1	11.75	58.8
Lead	220	1	16.70	83.5

Transmission line - coaxial

Electrical Breakdown is the phenomenon where an insulating material suddenly becomes conductive.

Air at Atmospheric Pressure: Breakdown field is ~3 kV/mm (3 x 10^6 V/m)

$E_max = V/(d * ln\left(\frac{D}{d}\right))$ **V** is the voltage between the inner and outer conductor.

We are often more interested in the **maximum power** the line can carry, not just the voltage. The power P traveling down a matched coaxial line is:

$$Pmax = \frac{E^2\, d^2 \sqrt{\varepsilon r}}{480} ln\left(\frac{D}{d}\right) \qquad P = \frac{V^2}{Z0}$$

- E = breakdown strength of air
- εr = relative permittivity of dielectric (1 for air)

Power handling is proportional to the **square of the breakdown field**

Important Note: The breakdown field is not a single absolute number. It depends on factors like: **Gap Distance/Pressure/Temperature, Humidity, Impurities**

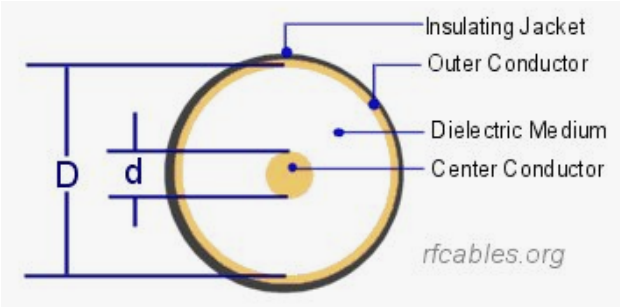

Material	Dielectric Strength (V/m)
Air	3e6
Bakelite	24e6
Neoprene rubber	12e6
Nylon	14e6
Paper	16e6
Polystyrene	24e6
Pyrex glass	14e6
Quartz	8e6
Silicone oil	15e6
Strontium titanate	8e6
Teflon	60e6

Transmission line - coaxial

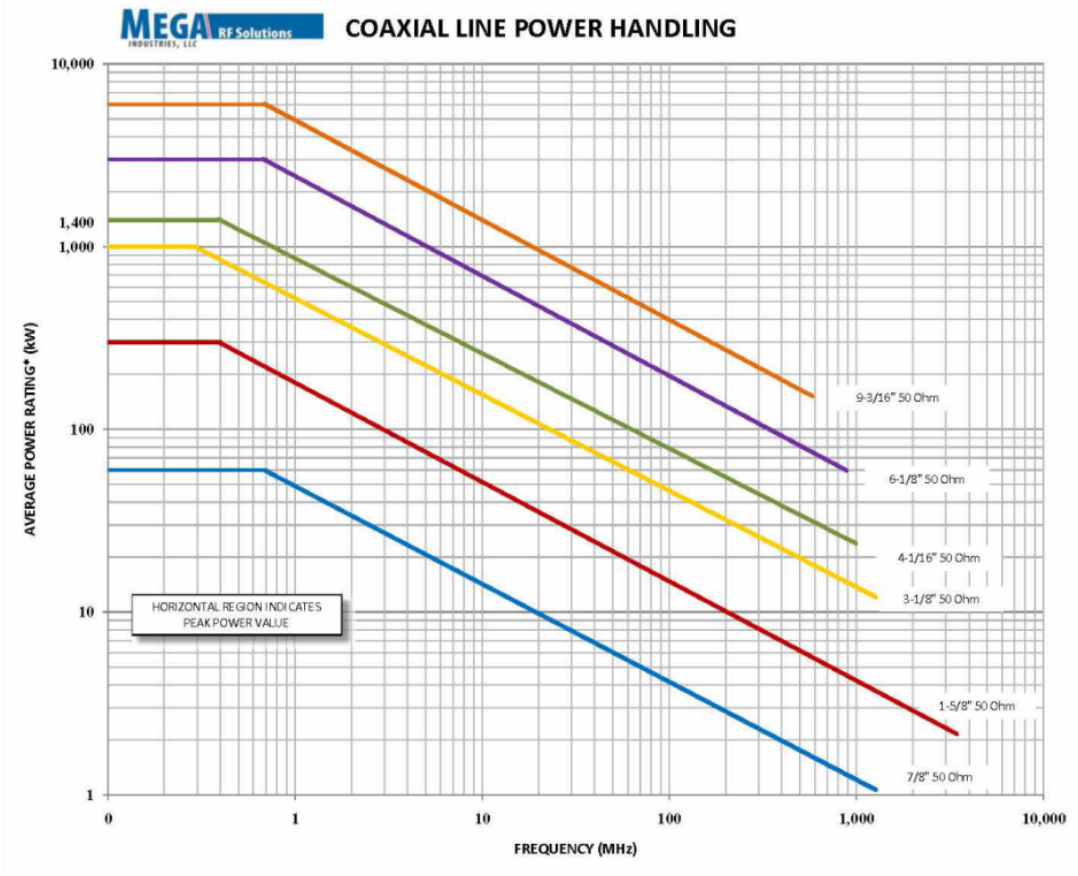

Transmission line - coaxial

Attenuation is the exponential decrease in signal strength (power) as it propagates along a transmission line. It is usually expressed in **decibels per unit length (dB/m)**.

Attenuation in a coaxial line arises from **Conductor Loss :** Resistance in the inner and outer conductors (due to the **skin effect**) and losses in the dielectric.

- The attenuation of a coaxial line is expressed as
- $\alpha = \left(\frac{0.11}{Zc}\right)\left(\frac{1}{D}+\frac{1}{d}\right)\sqrt{f} + 0.0277\ \sqrt{\varepsilon r}\ \tan\delta\ f\ (db/m)$
- with
- α = attenuation constant, dB/m
- Zc= characteristic impedance in Ω
- f = frequency in MHz
- D = inside electrical diameter of outer conductor in mm
- d = outside electrical diameter of inner conductor in mm
- εr = relative permittivity of dielectric
- tan δ = loss factor of dielectric

Material	ε_r	tan δ	Breakdown MV/m
Air	1.00006	0	3
Alumina 99.5%	9.5	0.00033	12
PTFE	2.1	0.00028	100

dBm (decibel-milliwatt) - A Unit of POWER

$$P(dBm) = 10 * \log_{10}(P / 1\ mW)$$

dB/m (decibel per meter) - A Unit of ATTENUATION or GAIN PER UNIT LENGTH

$$Attenuation\ (dB/m) = 10 * \log_{10}(P_in / P$$

For example : 0.1 dB/m = The signal loses about 2.3% of its power for every meter it travels.

Transmission line - coaxial

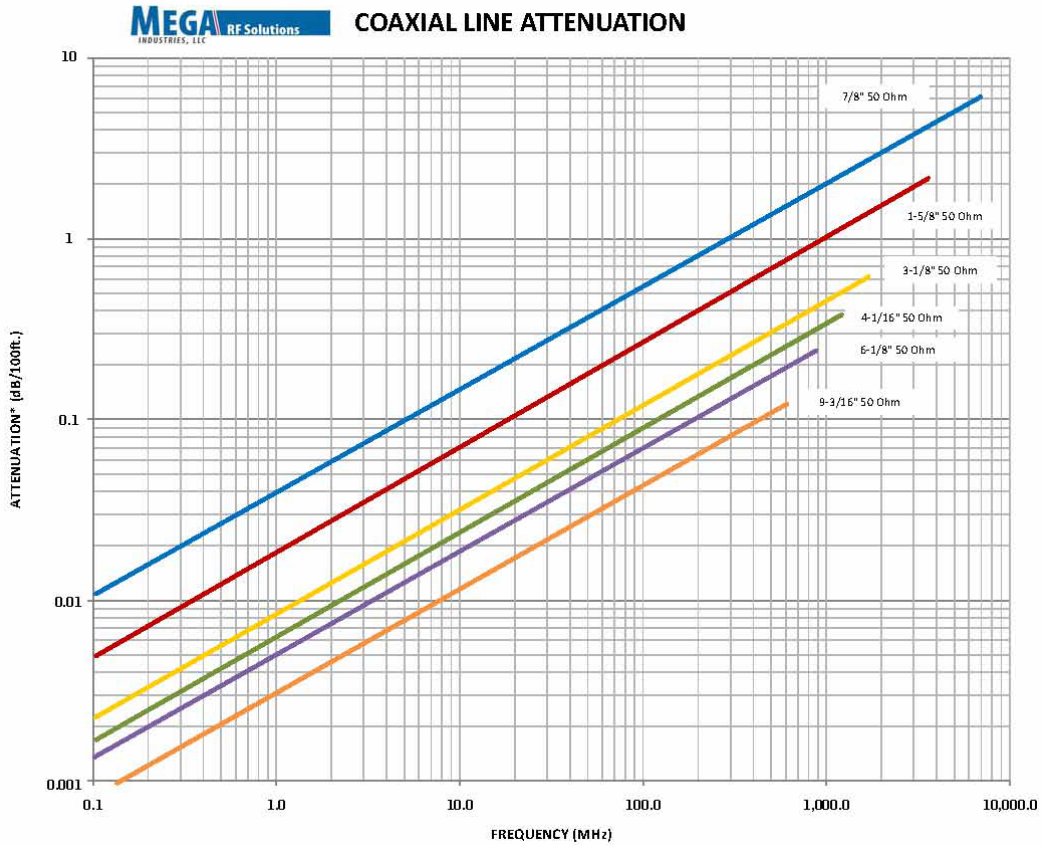

50 Ohms standard

The Maximum Power Handling Limit (~30 Ohms) : **pump the most power through a cable**

The Minimum Attenuation Limit (~77 Ohms) : **have the lowest signal loss over a long cable**

The Great Compromise: 50 Ohms

50 Ω
Best compromise (power)

60 Ω
Best for voltage

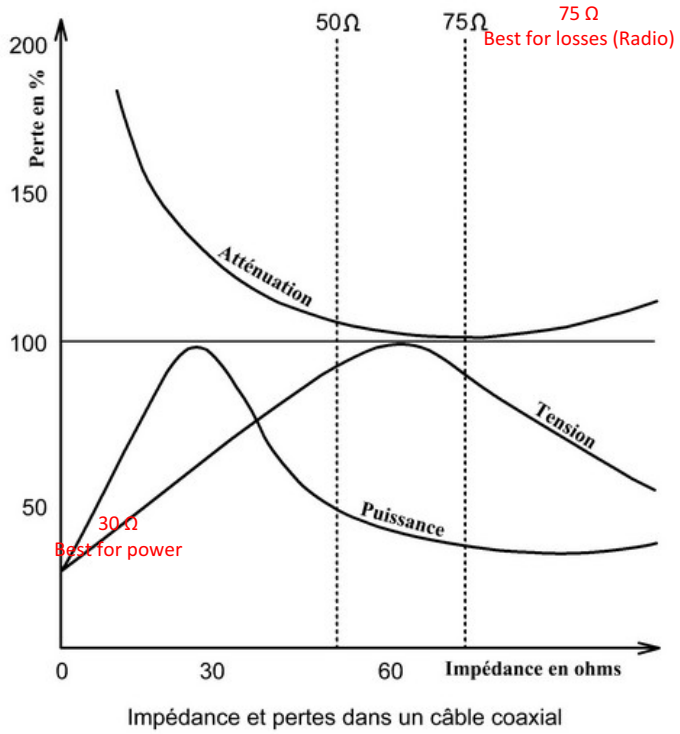

Impédance et pertes dans un câble coaxial

Matching

Cavity Matching is the process of designing and adjusting a network (the "matching network") to transform the complex impedance of a resonant cavity (like your cyclotron cavity) to the characteristic impedance of the power source (typically **50 Ω**) at a specific operating frequency.

The ultimate goal is **maximum power transfer** and **minimum reflected power**

A resonant cavity like the one in your cyclotron is not a simple 50-ohm resistor. Its impedance is:

Highly Frequency-Dependent: It is purely resistive **only at its exact resonant frequency (f_r)**. At any other frequency, it has a large reactive component (inductive or capacitive).

Very High Resistance at Resonance: The equivalent resistance at resonance (R_shunt) can be very high (kilo-ohms to mega-ohms), as it represents the ratio of the stored energy to the power lost per cycle (related to its high Q-factor).

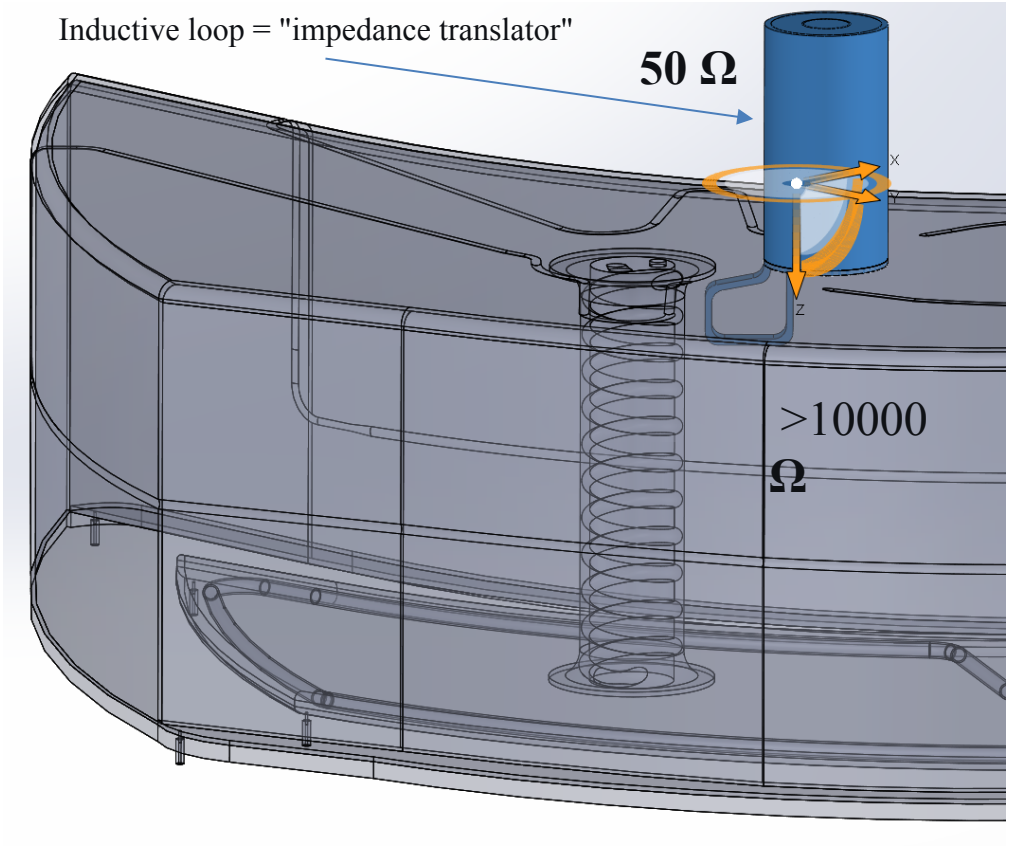

Matching

The two primary functions of the matching network are:

Resonance: Cancel the reactive component of the cavity's impedance (X_cavity), making the total impedance purely real.

Resistance Transformation: Transform the high real resistance of the cavity (R_shunt) down to 50 Ω.

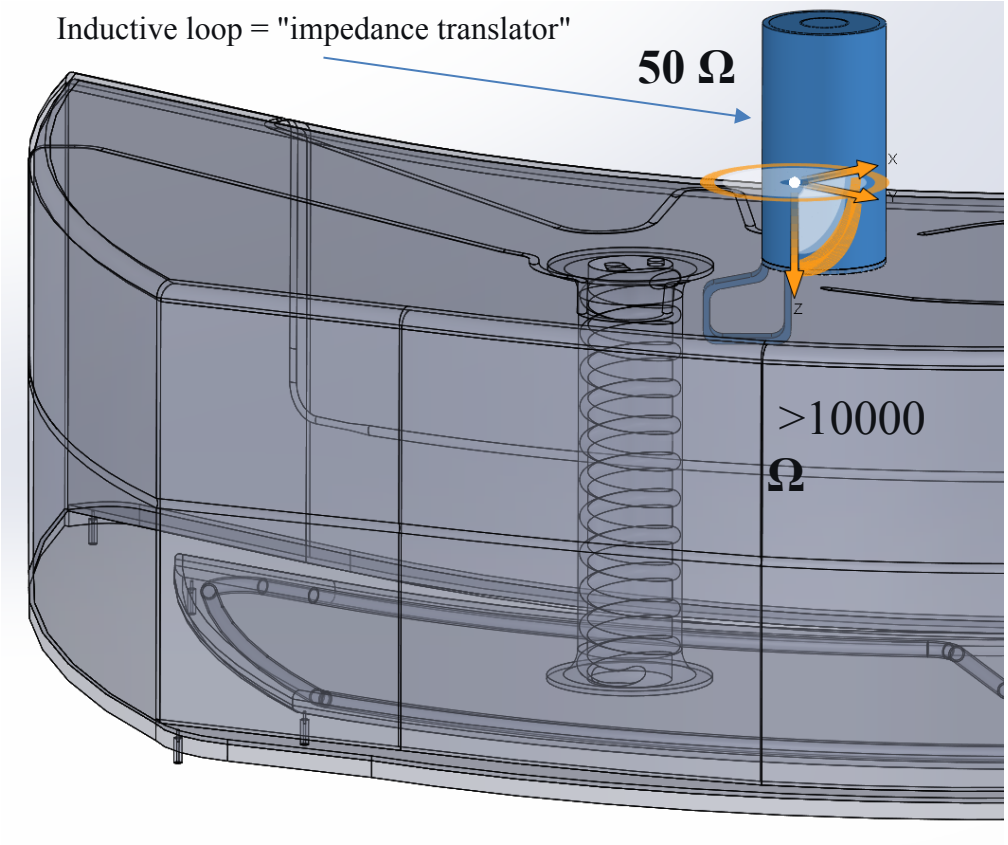

Capacitive coupling

Capacitive Coupling is a fundamental method of transferring energy between two circuits or components using **electric fields** The inner conductor is unterminated. The capacitance between the conductor and the cavity walls is used to couple.

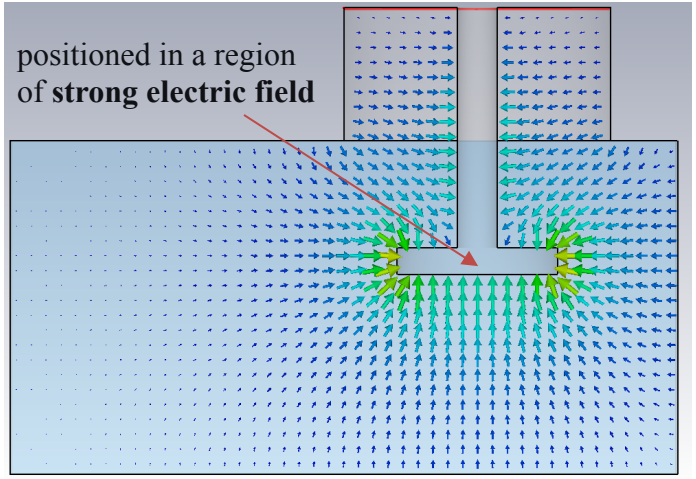

The equivalent circuit for electric coupling : a **current source** in parallel with a capacitance.

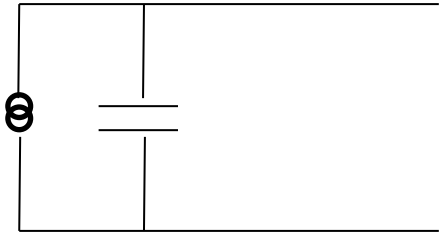

Imagine a **capacitor**. When an AC voltage is applied to one plate (the "driver"), an alternating electric field is created across the gap. This changing electric field *induces* an alternating voltage on the second plate (the "receiver"), even though there is no direct electrical connection. This is the essence of capacitive coupling: **energy transfer through a displacement current, mediated by a changing electric field.**

Inductive coupling

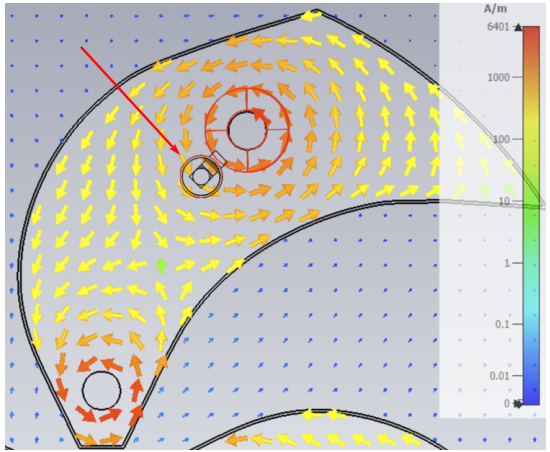

Inductive coupling works through **magnetic fields (H-**

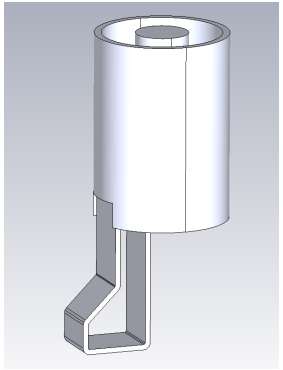

Maximum coupling occurs when the plane of the loop is oriented to allow the MAXIMUM MAGNETIC FLUX to pass through it.
This happens when the magnetic field lines are PERPENDICULAR to the plane of the loop.
Larger area intercepts more magnetic flux, increasing coupling.
Coupling is stronger in regions of high magnetic field density inside the cavity.

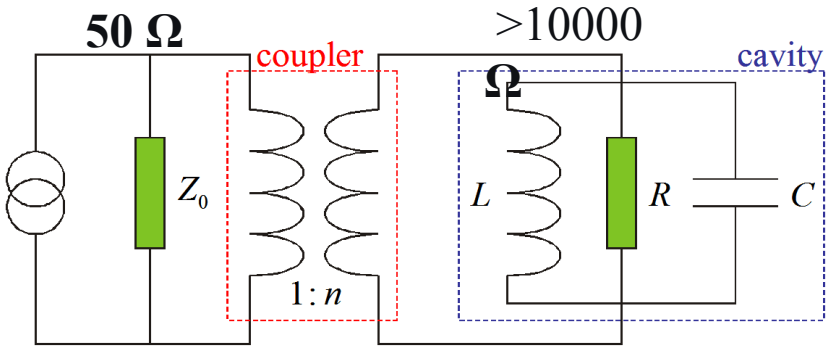

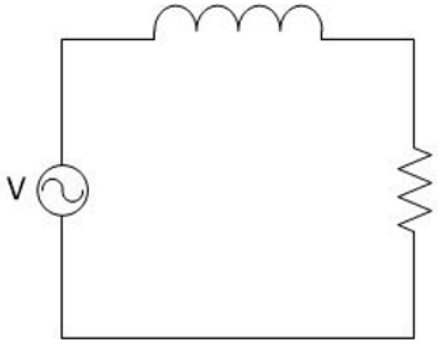

$Z_{in} \approx k^2 * Z_{cavity}$

By adjusting the orientation/size of the loop, you are directly adjusting k
Your goal is to find the k that makes Z_in = 50 Ω.

coupling

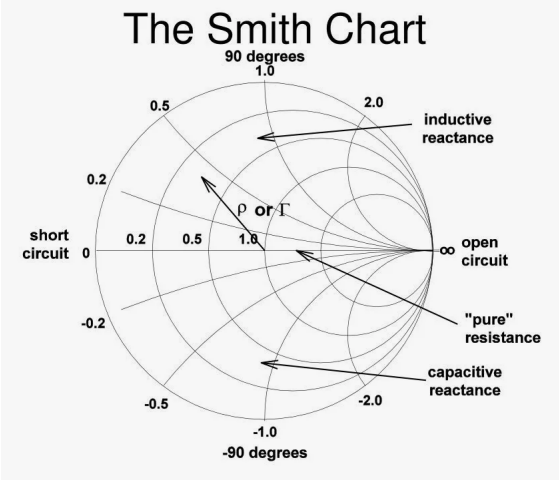

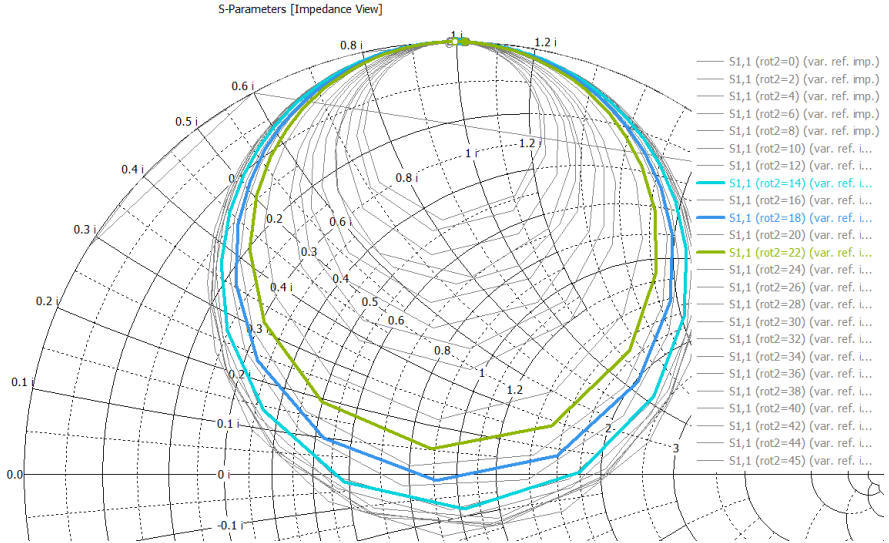

β < 1 (undercoupled)

β =1 (critically

β >1 (overcoupled)

coupled)

$$\beta = \frac{Pexternal}{Pinternal}$$

- `P_external` is the power coupled out to the external circuit (e.g., delivered to an antenna or absorbed by a beam).
- `P_internal` is the power dissipated as heat in the cavity walls.

β < 1 The full power from the source cannot be delivered to the cavity because the coupling is insufficient to "pull" the energy out efficiently.

β >1 The cavity is "overloaded" by the external circuit, it reduces the efficiency of power transfer at resonance because some power is reflected.

β =1 **Maximum power transfer** and **zero reflected power** at the resonant frequency. This is the ideal operating condition for transferring power from your amplifier to the cavity.

The types of coupling—**undercoupled**, **critically coupled**, and **overcoupled**—describe the relationship between a resonant cavity (or any resonator) and the external circuit feeding it. They are defined by the **coupling coefficient, β (beta)**.

coupling

Unloaded Q (*only* the power lost in the cavity walls)

$$Q_0 = \frac{W * U}{Pinternal}$$

$$Q_l = \frac{W * U}{Pinternal + Pexternal}$$

$$Q_l = \frac{Q_0}{1+\beta} \quad U_0 = \frac{4\beta P_f}{(1+\beta)^2}\frac{Q_0}{\omega}$$

At -10 dB This corresponds to a point where the **VSWR is approximately 2:1**, a common benchmark for an "acceptable" match in many systems. It means ~90% of the power is still being delivered to the load.

$$Q_l = \frac{f}{Bw_S11}$$

Loaded Q (This is the **effective** Q of the resonator when it is connected to the external load. It considers *all* losses, both internal and external.)

- The **Q factor** changes based on the coupling. Critical coupling occurs when $\beta = 1$, which results in a **Loaded Q (Q_L) that is exactly half the Unloaded Q (Q_0)**.

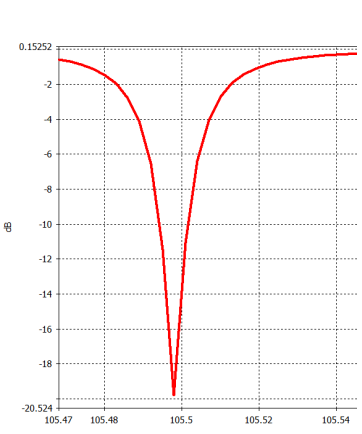

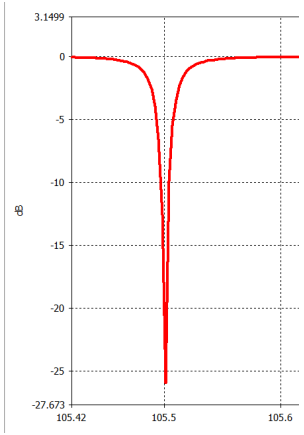

When you adjust the coupling loop (its angle or position), you are directly controlling **β**.

The **bandwidth of S_{11}** is a fundamental measurement in RF engineering that tells you how sensitive your impedance match is to changes in frequency.

- **Narrow S_{11} Bandwidth:** The device is matched only at a very specific frequency. The S_{11} dip is very sharp and narrow. This indicates a high Q_L system (very resonant).

- **Wide S_{11} Bandwidth:** The device is matched over a broad range of frequencies. The S_{11} dip is wide and shallow. This indicates a low Q_L system (less resonant, more broadband).

Cavity filling

the **field amplitude decay time constant**

$$\tau = \frac{2Q_l}{w}$$

The filling time is directly related to the cavity's bandwidth, and hence its **Loaded Q-factor**

$$U(t) = U_{max}*(1\text{-}e^{-t/\tau})$$

When you turn on the power, the energy in the cavity $U(t)$ does not instantly jump to U_0 .It builds up exponentially with time constant τ:

The higher the loaded Q (the narrower the bandwidth) the higher the stored energy but the longer it takes to fill.

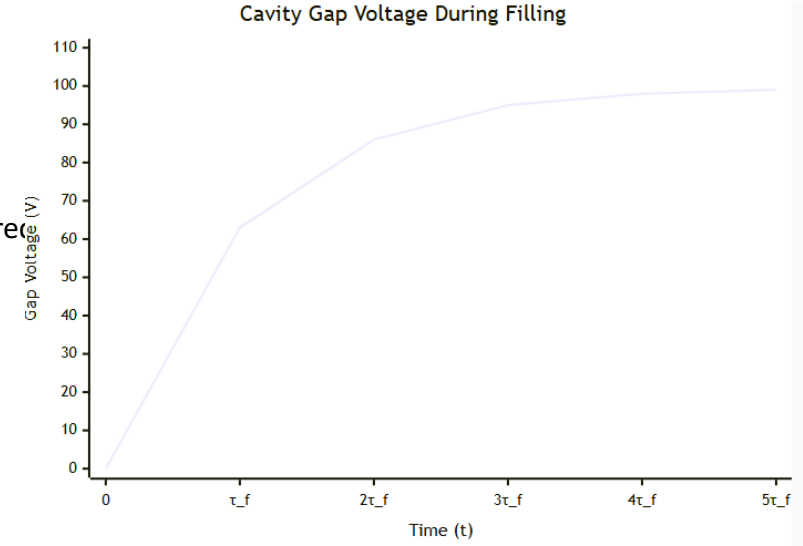

The filling time τ is critical for:

•**Pulsed Systems (e.g., Particle Accelerators, Pulsed Lasers):** The pulse length must be significantly longer than τ to efficiently fill the cavity and extract energy. If the pulse is too short, most of the energy is reflected, and the cavity never reaches its designed stored energy.

•**Switching Speed:** How quickly you can modulate the power in a cavity (e.g., for optical communications) is limited by τ. A smaller τ (lower Q_L (allows for faster switching but reduces the maximum stored energy and spectral purity (as the resonance becomes broader).

Power build-up (transient reflections)

Critical Coupling ($\beta = 1$)

The reflection starts at 100% and decays exponentially to 0%. The cavity appears like a perfect mirror at first, then "disappears" as it becomes perfectly matched.

Under-Coupled ($\beta < 1$)

The reflection decays from 100% down to its steady-state value. The system [illegible] reflective, but less so once filled.

Over-Coupled ($\beta > 1$)

The reflection can **dip below the steady-state value** before rising back up. In fact, for a strongly over-coupled cavity, the reflection can reach **zero at a specific time** during the filling process.

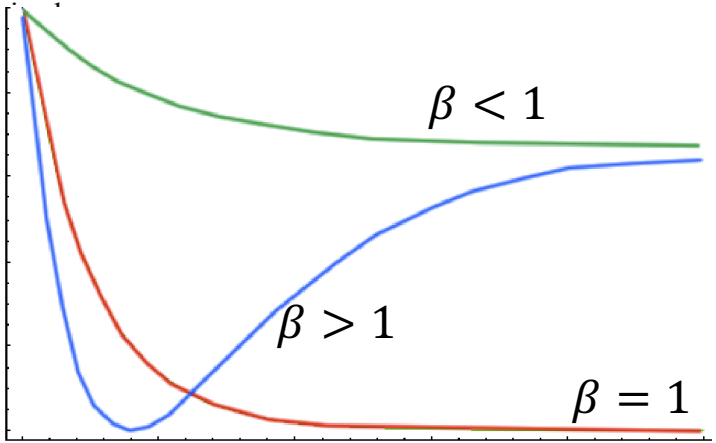

The wave gets to enter the port from the very beginning. The "prompt reflection" is just the part that *fails* to enter on the first attempt. The magic of resonance is that the energy which *did* enter later comes back out to help more of the subsequent wave get in by canceling out the reflection.

Beam loading

Beam loading is the effect where a charged particle beam, passing through a resonant cavity, **extracts energy from the cavity's electromagnetic fields**. The beam acts as an additional, dynamic load on the cavity

The net effect is that the beam **extracts energy from the cavity**, reducing the stored energy. This is equivalent to the beam imposing an **additional loss mechanism**.

To achieve efficient power transfer, we don't just control the amplitude of the RF source; we also control its **phase**.

When the generator voltage is set to be exactly **anti-phase** to the beam-induced voltage, the generator can "fill in the hole" left by the beam, maintaining a stable cavity voltage and ensuring all power goes to the beam and internal losses, with none reflected.

$$\beta = \frac{Pexternal}{Pinternal + Pbeam}$$

$$P_{beam} = I_{beam} * U_{cav} * \cos(\phi)$$

The power drafted from the cavity by the beam

$\cos(\phi s)$ is the **power factor** for the beam-cavity interaction.

ϕs**=0∘:** The bunch arrives at the peak of the voltage, giving maximum energy transfer.

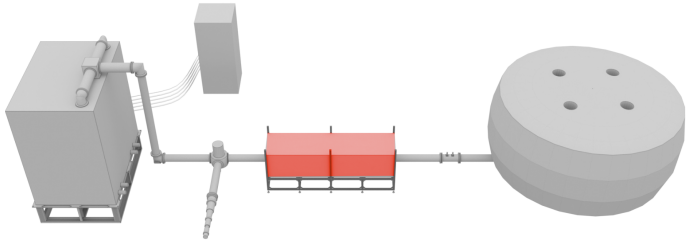

The Phase Shifter

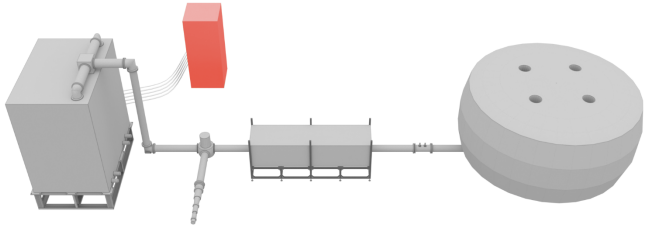

The LLRF System

Power reflections

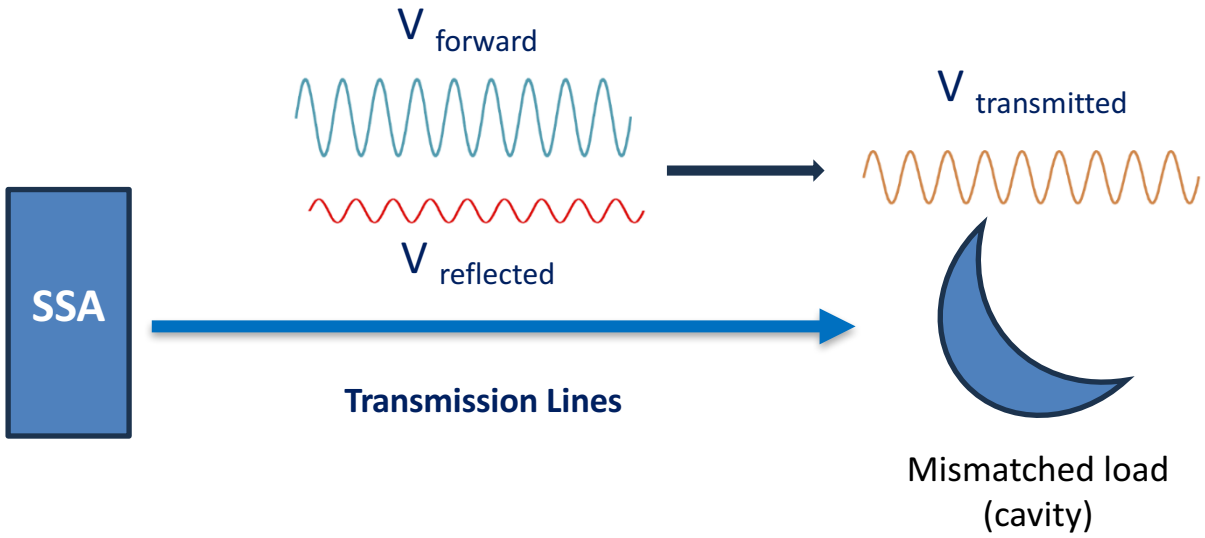

Power reflections

- Standing Wave Ration SWR is a measure of impedance matching of the load
- A wave is partly reflected when a transmission line is terminated with other than a pure resistance equal to its characteristic impedance
- The reflection coefficient is defined by

$$\Gamma = \frac{\mathbf{Vr}}{\mathbf{Vf}}$$

$\Gamma = -1$	when the line is short-circuited complete negative reflection
$\Gamma = 0$	when the line is perfectly matched, no reflection
$\Gamma = 1$	when the line is open-circuited complete positive reflection

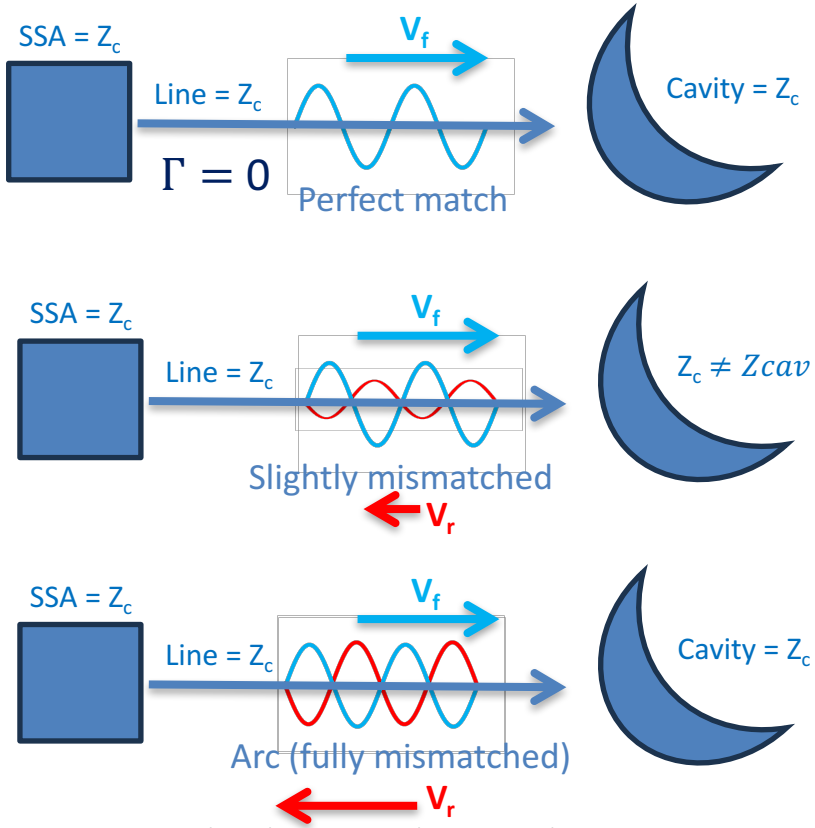

Twice the voltage or no voltage twice the current

Power reflections

- At some points along the line the forward and reflected waves are exactly in phase
- $|\mathbf{V}_{max}| = |\mathbf{V}_f| + |\mathbf{V}_r| = |\mathbf{V}_f| + |\Gamma\mathbf{V}_f| = (\mathbf{1} + |\Gamma|)\,|\mathbf{V}_f|$
- full reflection
- $|\mathbf{V}_{max}| = \mathbf{2}\,|\mathbf{V}_f|$

At other points they are 180° out of phase

- $|\mathbf{V}_{min}| = |\mathbf{V}_f| - |\mathbf{V}_r| = |\mathbf{V}_f| - |\Gamma\mathbf{V}_f| = (\mathbf{1} - |\Gamma|)\,|\mathbf{V}_f|$
- full reflection
- $|V_{min}| = \mathbf{0}$

The Voltage Standing Wave Ratio is equal to

- $\mathbf{VSWR} = \frac{|\mathbf{V}_{max}|}{|\mathbf{V}_{min}|} = \frac{\mathbf{1}+|\Gamma|}{\mathbf{1}-|\Gamma|}$

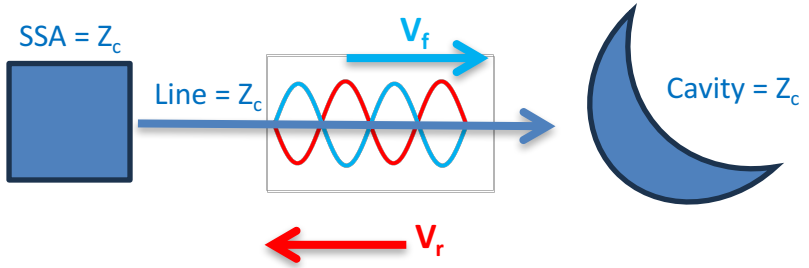

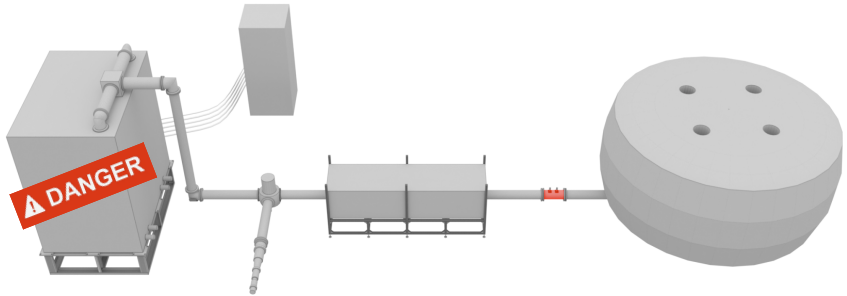

In case of full reflection Vmax = 2 Vf (Pmax equivalent to 4 Pf)

Circulator

- In order to protect our lines and our amplifiers from the reflected power a possible device is a Circulator
- It is a passive non-reciprocal three-port device
- The signal entering any port is transmitted only to the next port in rotation, an RF signal experiences a low loss in the direction of the arrow and high loss in reverse direction while propagating through the Circulator
- The best place to insert it is close to the reflection source
- If full reflection lines between circulator and DUT (device under test, load) shall sustain $\mathbf{V_{max} = 2\ V_f}$ (P_{max} equivalent to 4 P_f)
- A load of P_f is needed on port 3 to absorb P_r
- System remains operational at all time

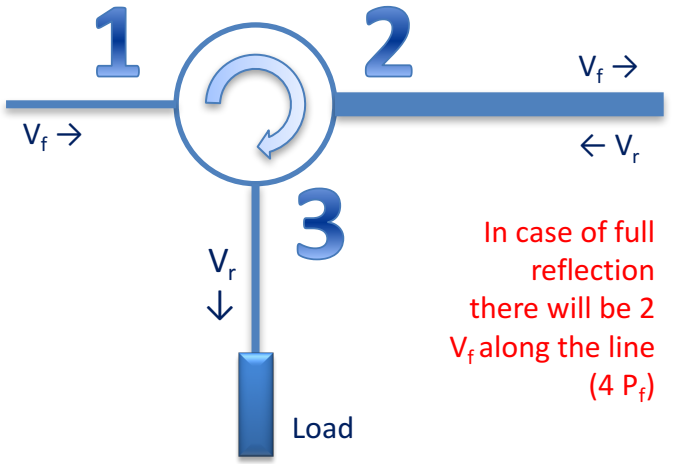

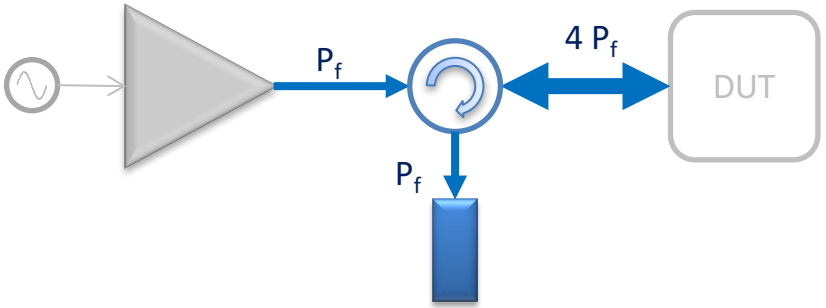

Circulator



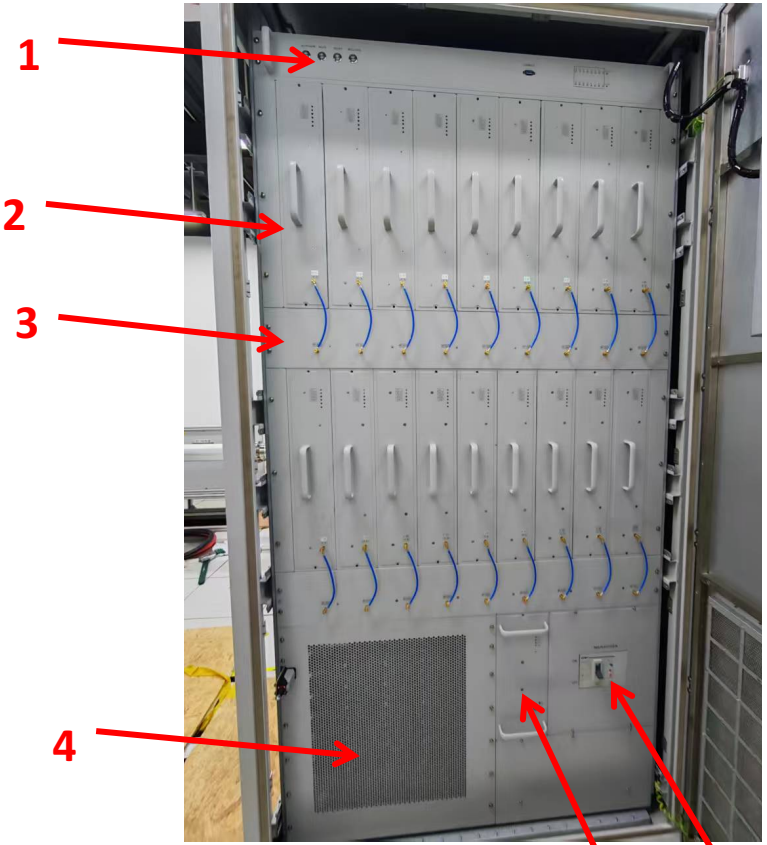

END OF PART 2

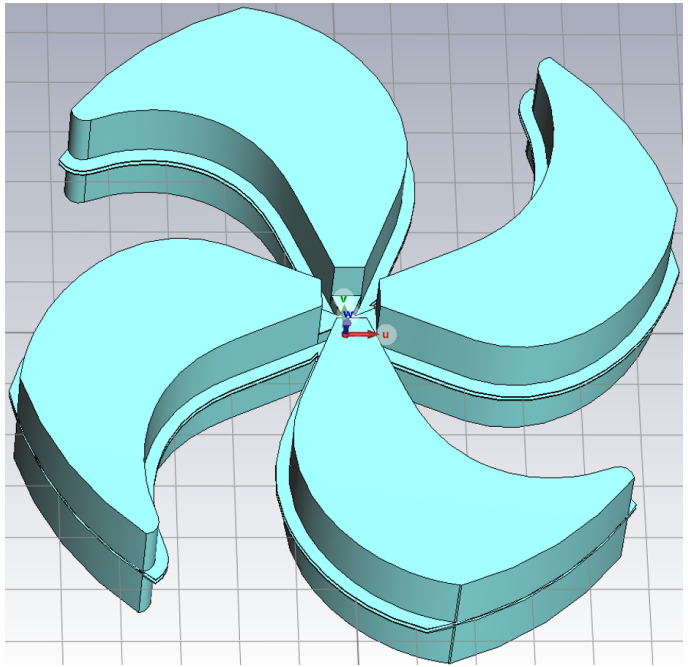

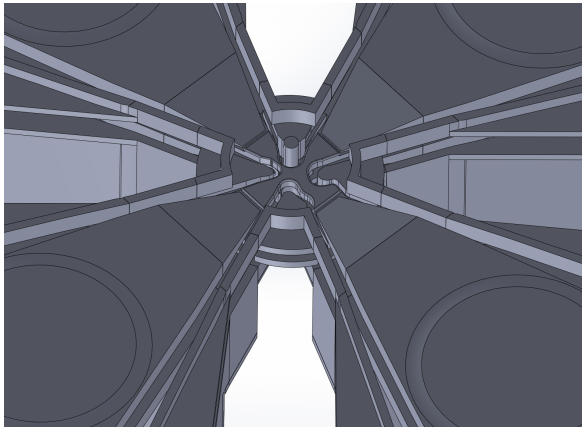

Simulation pipeline

- Parametric resonator modeling in Solidworks.
- CST Eigenmode solver is a calculation for finding the resonator’s eigenfrequency, Q–factor, and losses.

  CST Conjugate heat transfer solver и Solidworks Computational fluid dynamics solver – cooling.
- CST Frequency domain solver – inductive loop simulation.

Parametric modeling

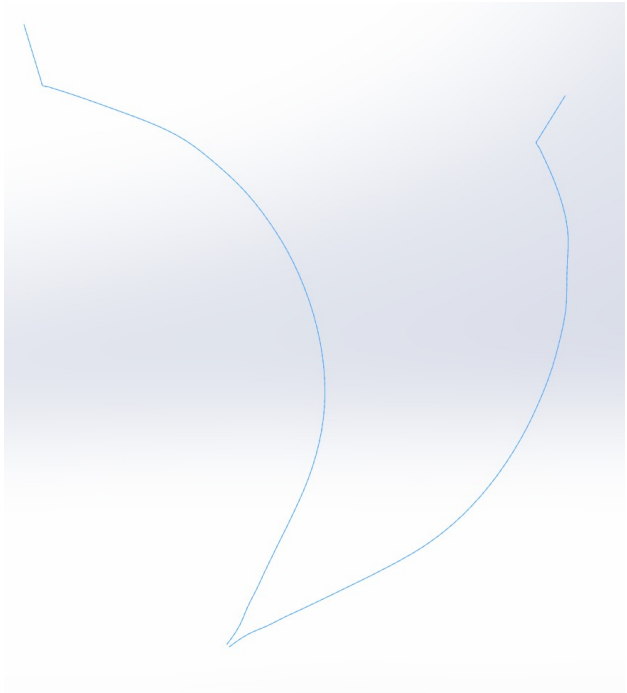

Кривая сектора

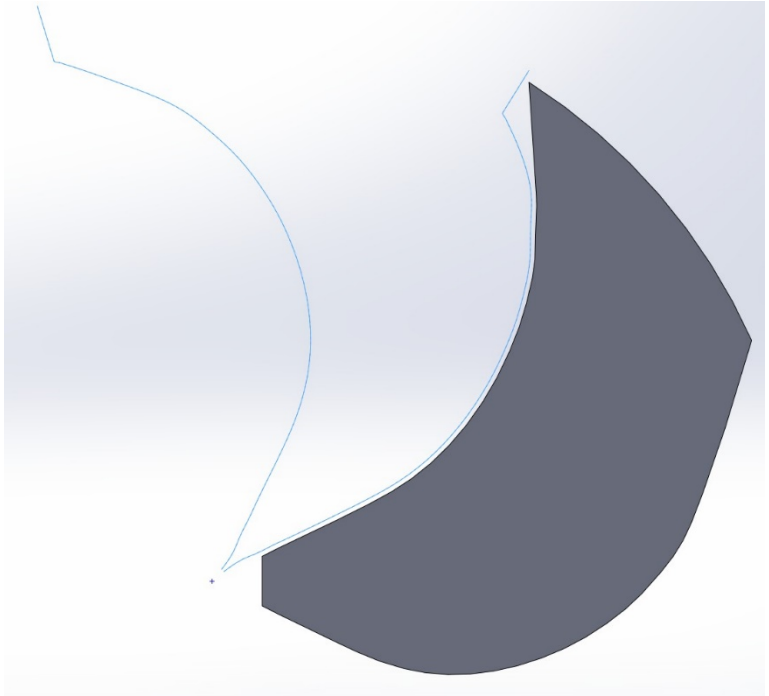

Кривая сектора и резонатор

Parametric modeling

Уравнения, глобальные переменные и размеры

Отфильтровать все поля

Имя	Значение / Уравнение	Равняется	Заметки
Глобальные переменные			
"step"	= "extract" / 10	24.00	
"extract"	= 240	240.00	
"start"	= 12	12.00	
"stem1_pos"	= 460	460.00	
"stem2_pos"	= 1740	1740.00	
"stem2_diam"	= 33	33.00	
"stem1_diam"	= 33	33.00	
"half_cav_h"	= 269.5	269.50	
Добавить глобальную переменную			
Элементы			
Добавить погашение элемента			
Уравнения			
"D1@Sketch2"	= "start"	12мм	
"D2@Sketch2"	= "start" + "step"	36мм	
"D3@Sketch2"	= "start" + "step" * 2	60мм	
"D4@Sketch2"	= "start" + "step" * 3	84мм	
"D5@Sketch2"	= "start" + "step" * 10	252мм	
"D6@Sketch2"	= "start" + "step" * 9	228мм	
"D7@Sketch2"	= "start" + "step" * 8	204мм	
"D8@Sketch2"	= "start" + "step" * 7	180мм	
"D9@Sketch2"	= "start" + "step" * 6	156мм	
"D10@Sketch2"	= "start" + "step" * 5	132мм	
"D11@Sketch2"	= "start" + "step" * 4	108мм	
"D1@Sketch19 stems position"	= "stem1_pos"	460мм	
"D2@Sketch19 stems position"	= "stem2_pos"	1740мм	
"D1@Boss-Extrude1 liner"	= "half_cav_h"	269.5мм	
"D1@Sketch11 - stem 2 shape"	= "stem1_diam"	33мм	
Добавить уравнение			

OK
Отмена
Импорт...
Экспорт...
Справка

Перестраивать автоматически
Связь с внешним файлом:
Угловые единицы:
Автоматический порядок решения

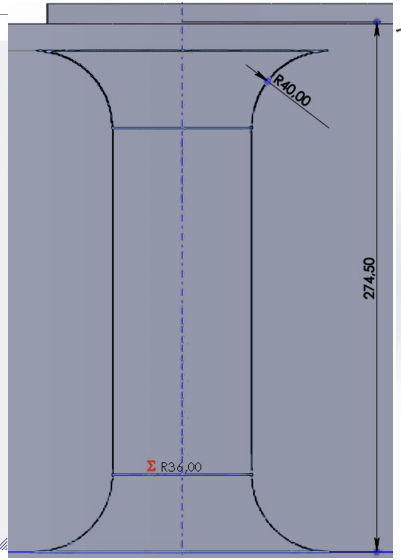

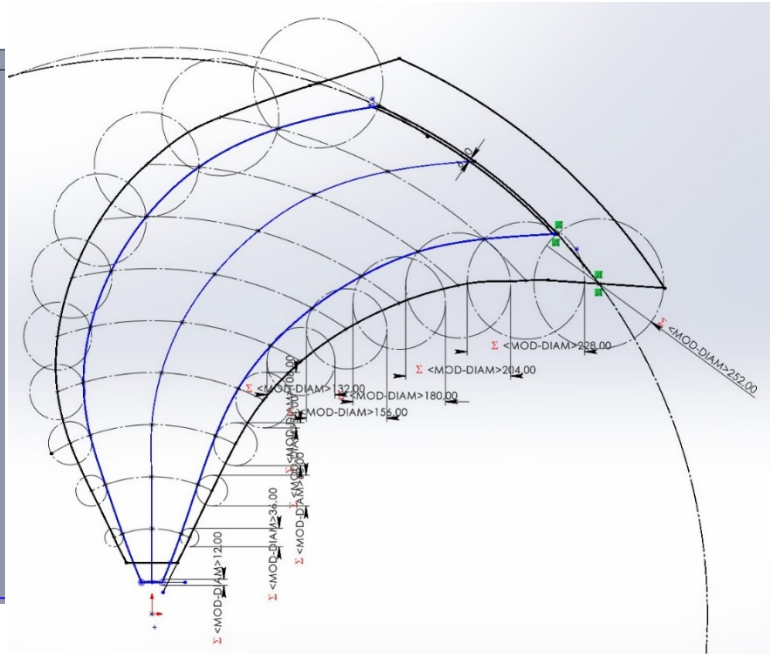

Coupled simulation

Part	Power, W
Stem 1	2070
Stem 2	2930
Dee plate	790
Half cavity	1815

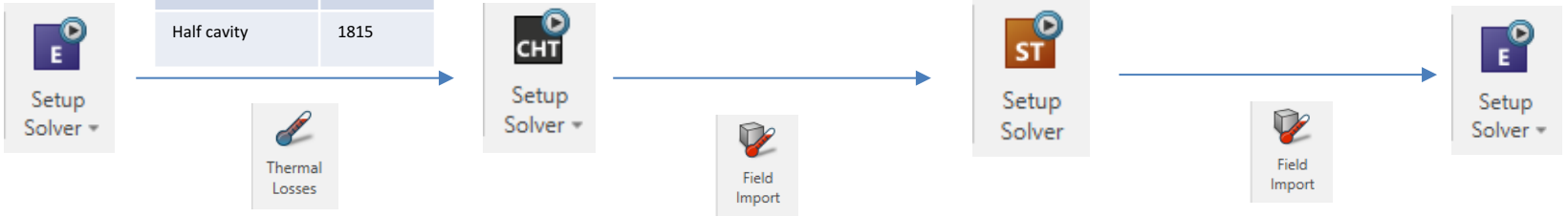

Eigenmode simulation

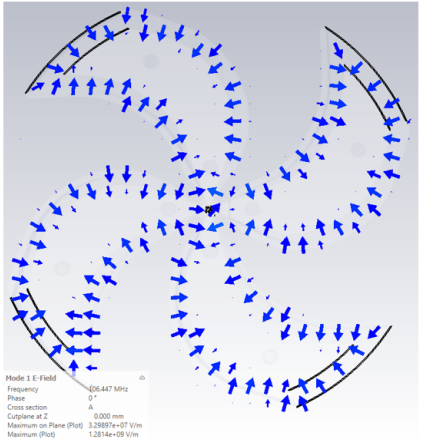

CST Eigenmode solver

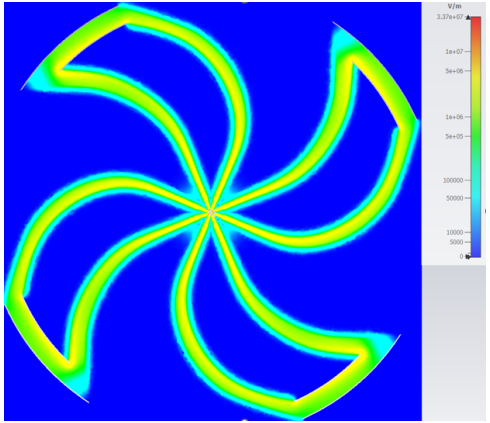

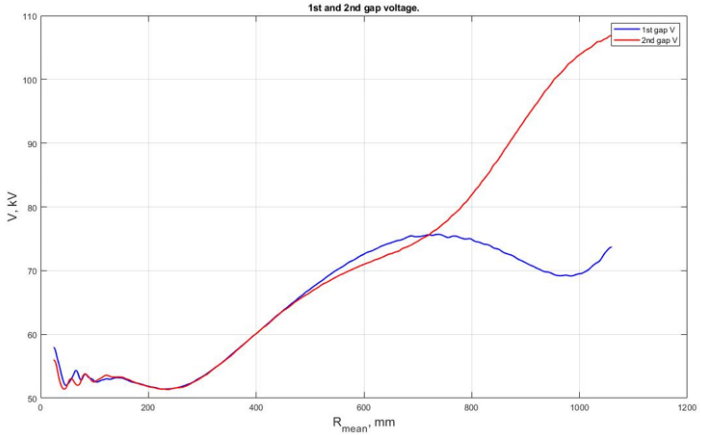

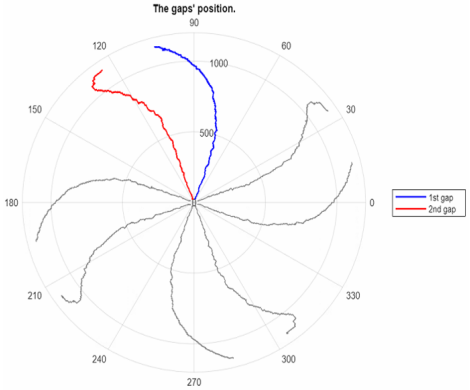

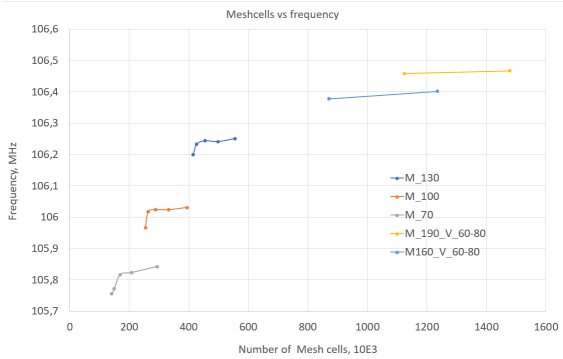

* Малинин В. А. CORD (Closed Orbit Dynamics): программа для анализа карт магнитного и ускоряющего полей в расчетах динамики пучка / В.А. Малинин и др. // Письма в журнал физики элементарных частиц и атомного ядра. - 2021. - Т. 18. - N 4 (236). - С. 393.

Sweeping

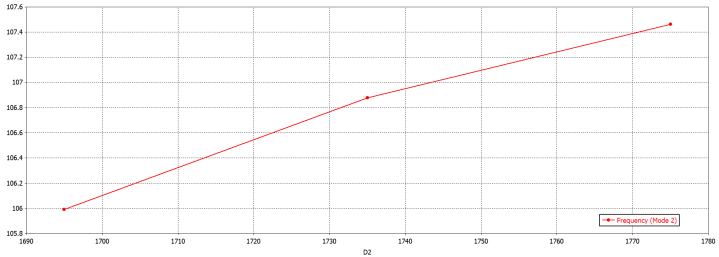

Frequency

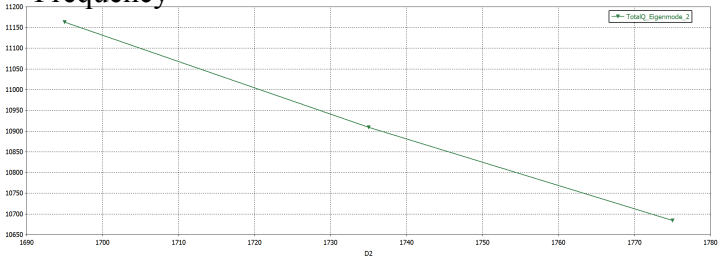

Q factor

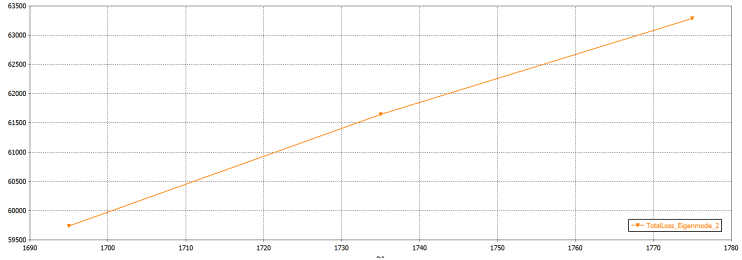

Losses

Stem 2 position

3D Run ID	D2	Frequency (Mode 2)	TotalLoss_Eigenmode_2	TotalQ_Eigenmode_2
0: Current ...				
1	1695	105.992	59740.7	11162.4
2	1735	106.878	61645.2	10908.6
3	1775	107.462	63283	10684.7

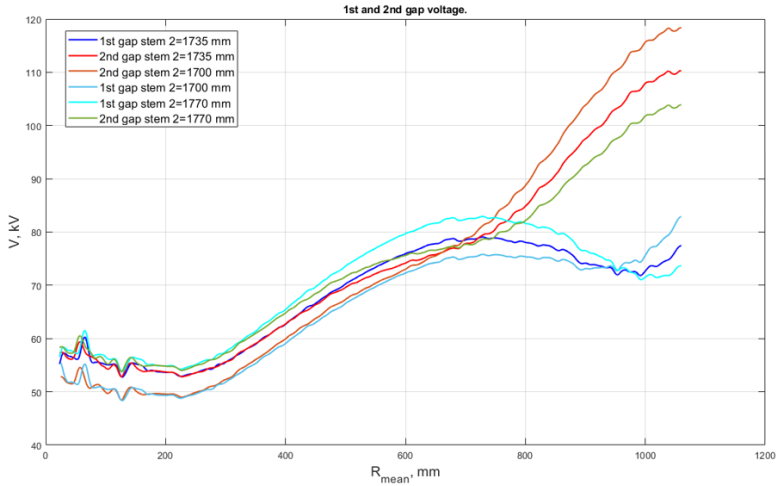

CST cooling

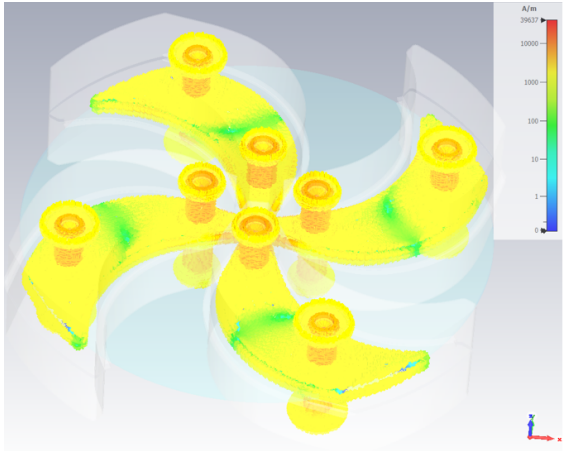

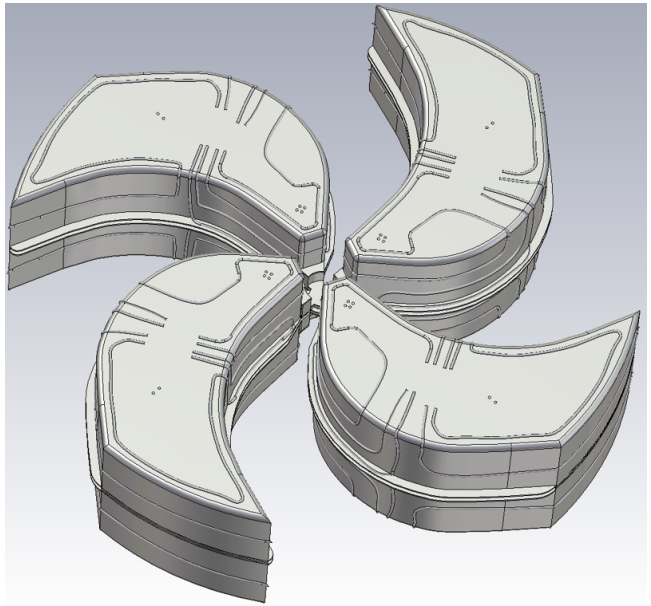

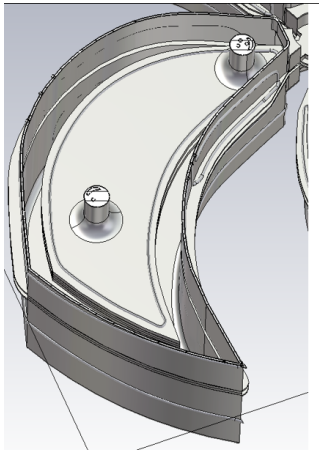

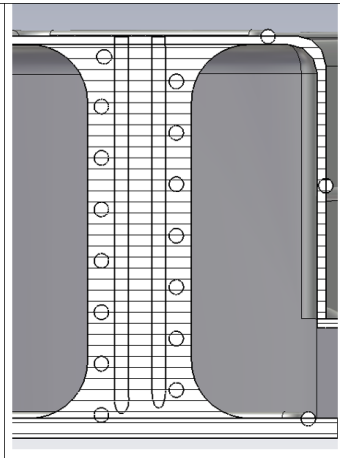

Part	Power, W
Stem 1	2070
Stem 2	2930
Dee plate	790
Half cavity	1815

CST cooling

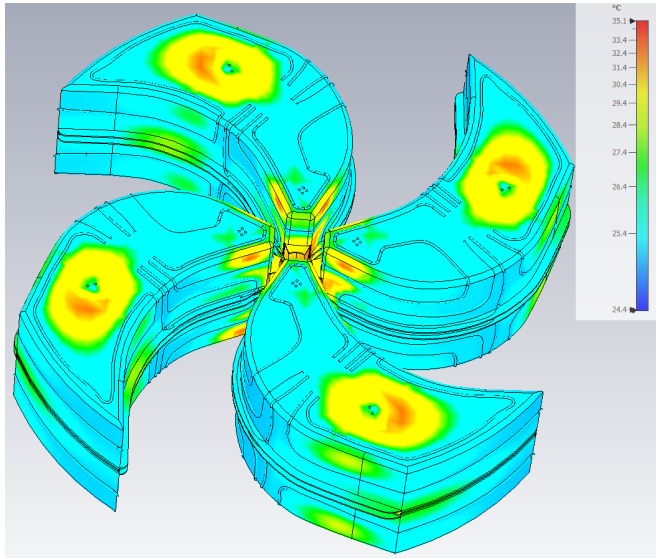

Liner (cavity) heating

CST Conjugate heat transfer solver

Part	Power, W
Stem 1	2070
Stem 2	2930
Dee plate	790
Half cavity	1815

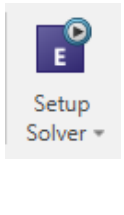

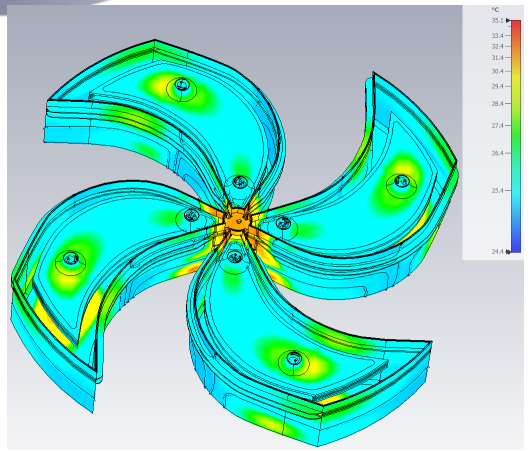

Dee heating

Stem heating

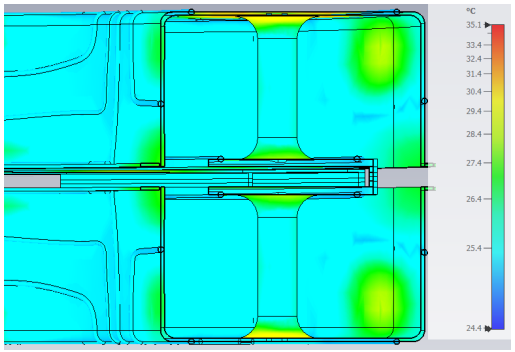

Solidworks cooling

Part	Power, W
Stem 1	2070
Stem 2	2930
Dee plate	790
Half cavity	1815

$$V = \frac{P}{c\rho\Delta T}$$

Узел	Losses, W +30%	Flow, m^3/s
Stem 1	2690	6,45E-05
Stem 2	3810	9,14E-05
Dee	1030	2,47E-05
Half cavity	2360	5,66E-05

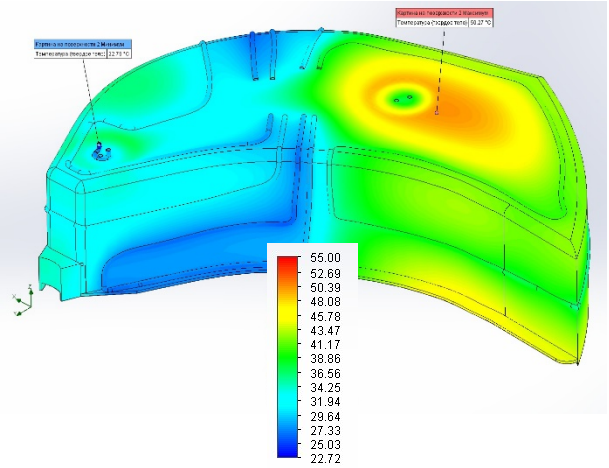

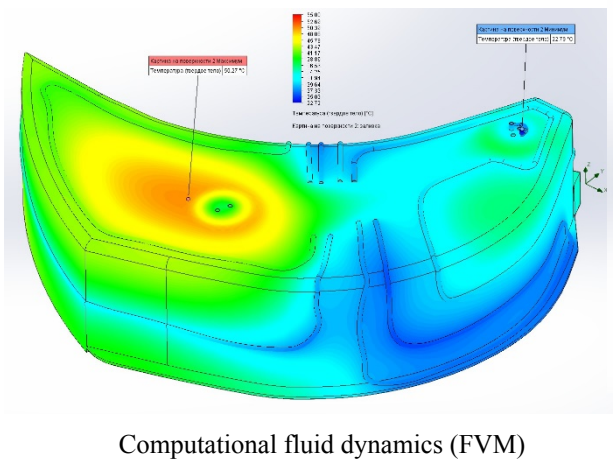

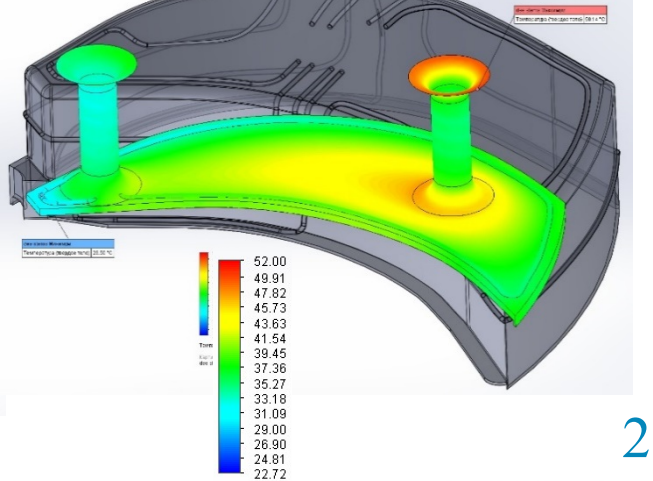

Computational fluid dynamics (FVM)

Solidworks cooling

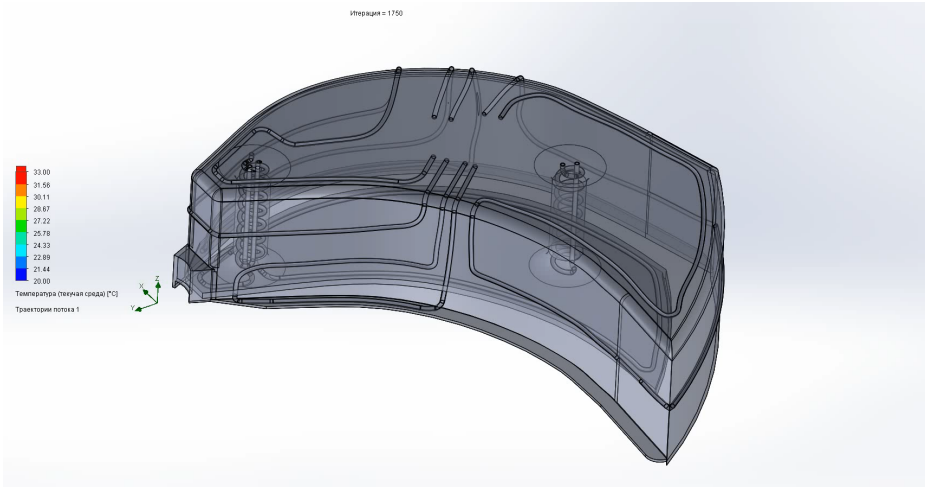

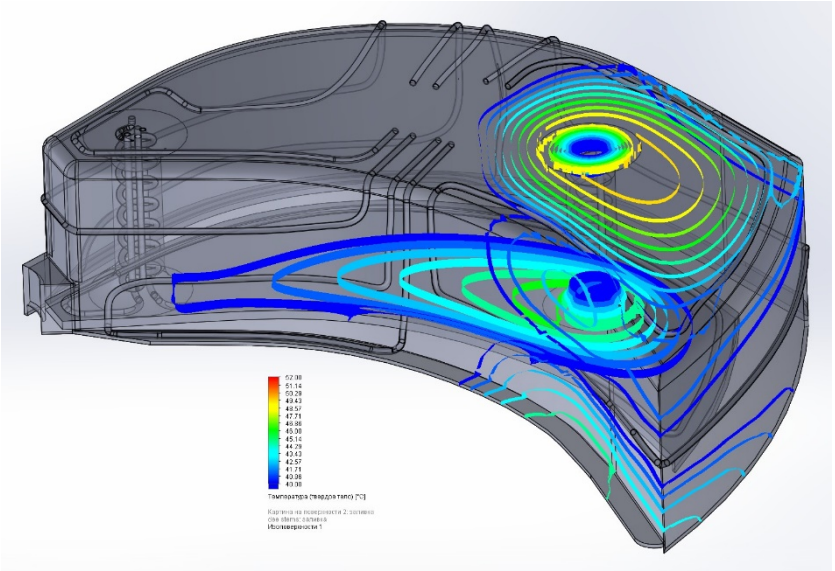

Список целей

Имя	Текущее значение	Прогресс сходимости	Критерий	Среднее значение
inlet pressure	106144 Pa	Достигнуто (IT = 361)	1134.44 Pa	106156 Pa
inlet velocity	0.869637 m/s	Достигнуто (IT = 361)	8.69637e-09 m	0.869637 m/s
outlet pressure	101717 Pa	Достигнуто (IT = 361)	0.537923 Pa	101717 Pa
outlet velocity	0.872378 m/s	Достигнуто (IT = 419)	0.000198666 m	0.872356 m/s

Solidworks cooling

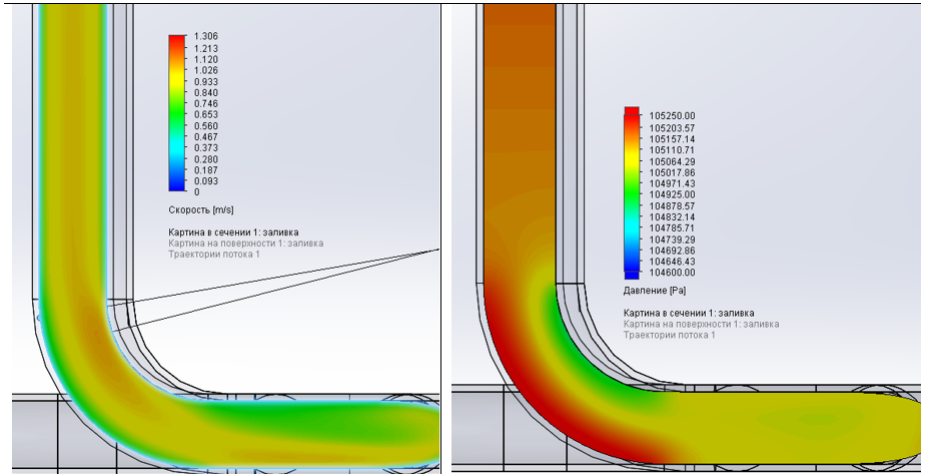

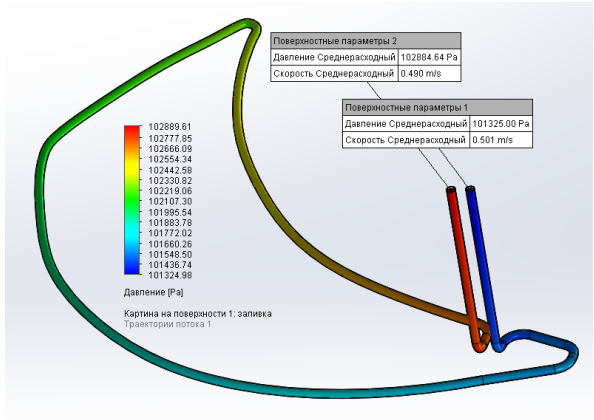

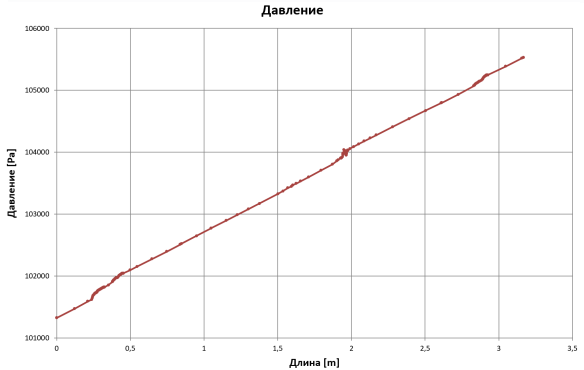

Inductive loop simulation

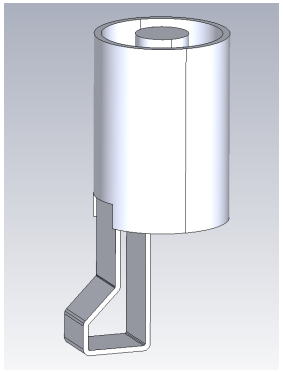

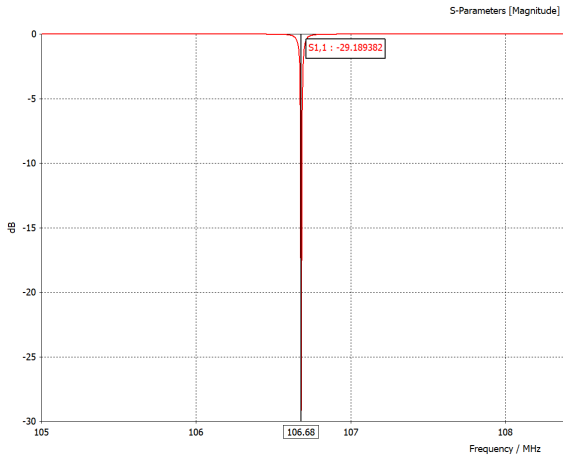

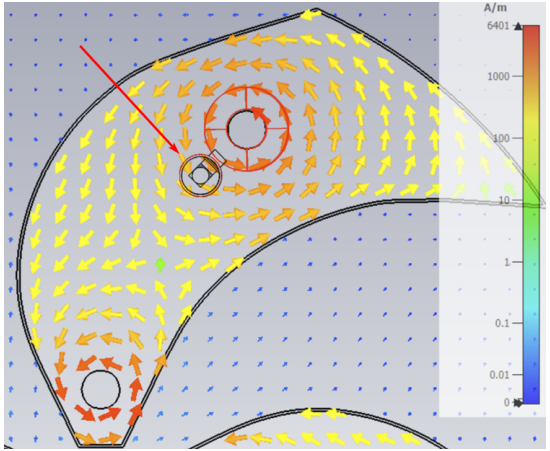

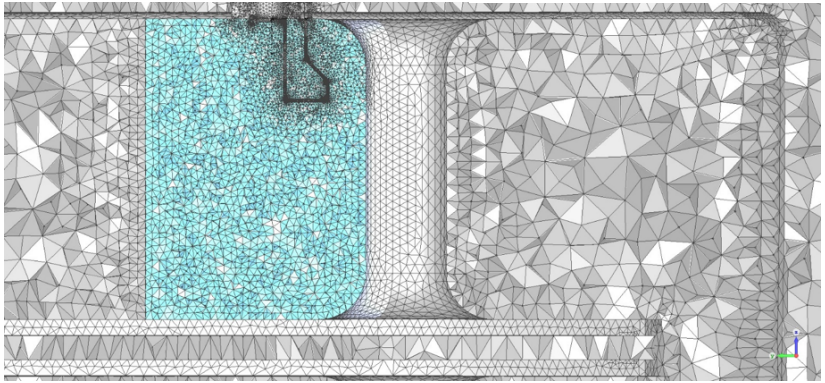

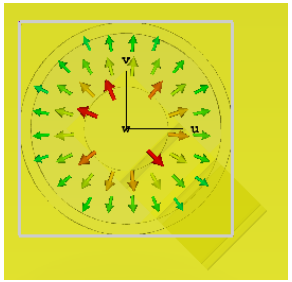

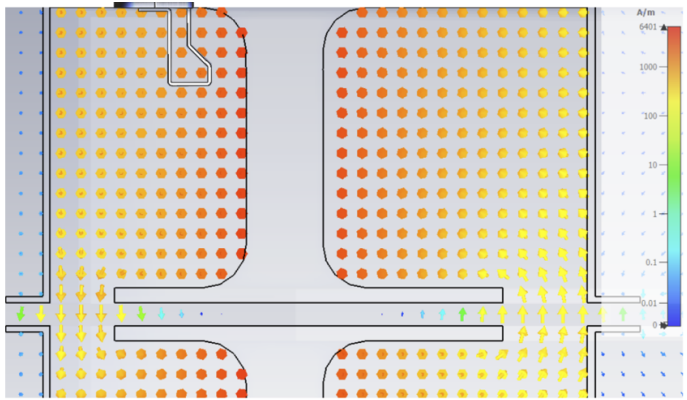

Inductive loop simulation

