The study was supported by a grant from the Russian Science Foundation: No 25-72-30005, https://rscf.ru/project/25-72-30005/.

Polarimeter for Polarized Protons and Deuterons at 5 MeV/nucleon at the Linac

A.N. Solovev, **V.V. Fimushkin, K.A. Ivshin, V.B. Dunin, N.V. Dunin, M.V. Kulikov, L.V. Kutuzova, V.E. Larionov, A. D. Sheremetiev**
Joint Institute for Nuclear Research, Dubna, Russia

A.N. Zelenskii
Moscow Institute of Physics and Technology, Moscow

A.S. Belov
Institute for Nuclear Research of Russian Academy of Sciences, Moscow



DSPIN 2026, Dubna



Layout of the NICA accelerator complex

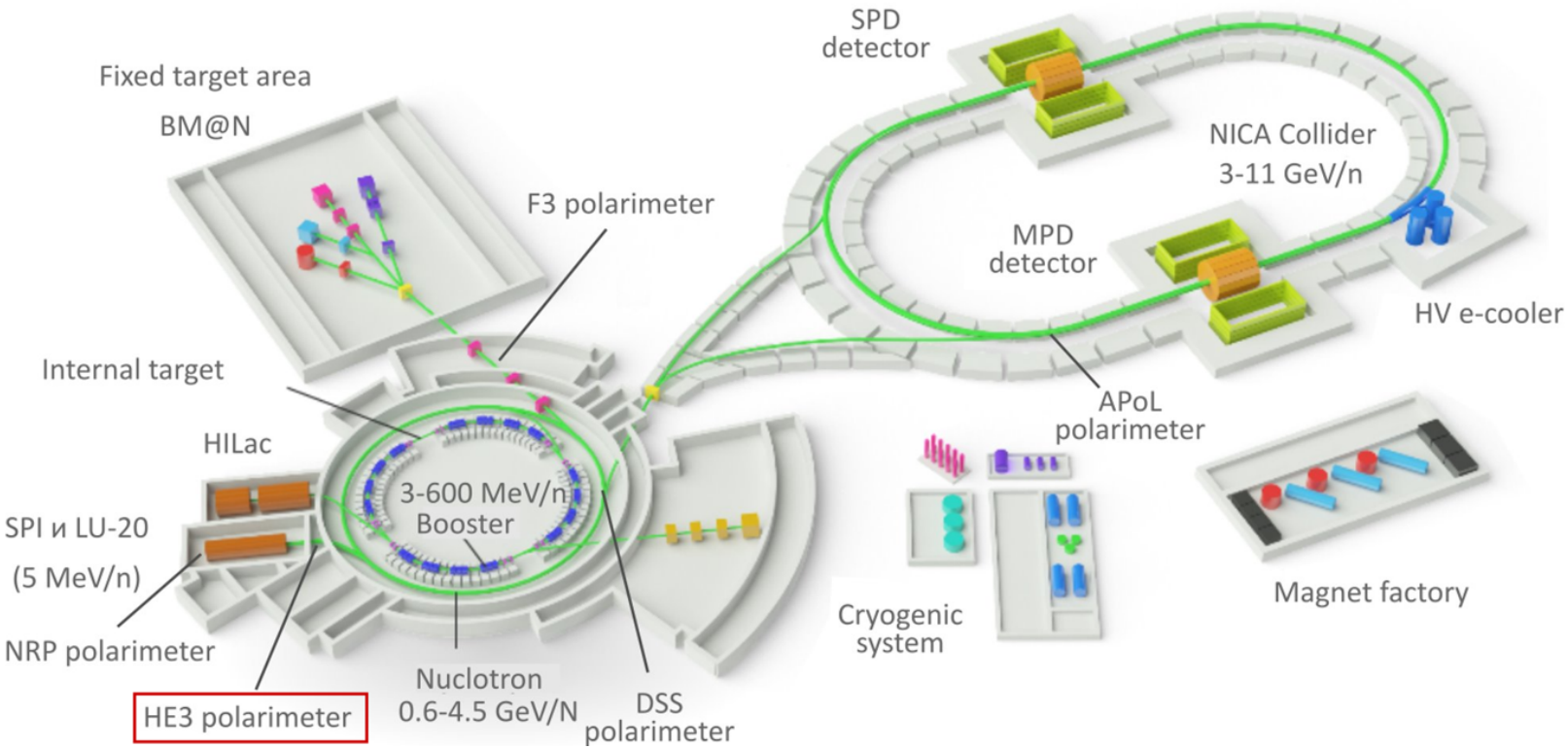

- Polarimeter installed in the LU-20 beamline (highlighted)
- Measures polarization of deuterons and protons before injection into Nuclotron

Polarimeter location at NICA

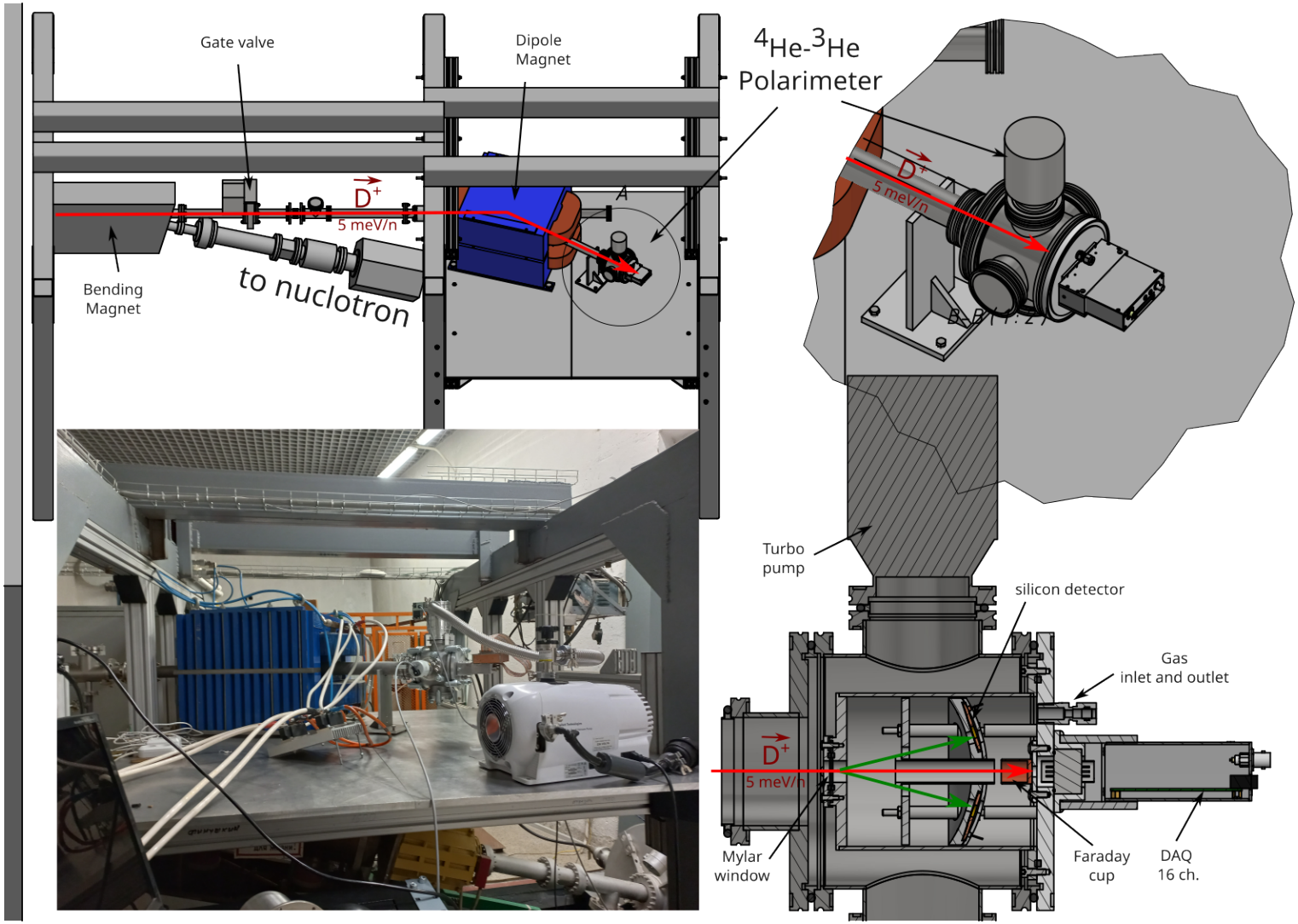

- Installed at the LU-20 linac, downstream of the polarized ion source (SPI)
- Measures polarization **before injection into Nuclotron**

Analyzing reactions

Parameter	$^3\mathrm{He}(d,p)^4\mathrm{He}$	$^4\mathrm{He}(d,d)^4\mathrm{He}$
Reaction type	Nuclear	Elastic scattering
Q-value	+18.35 MeV	0
Detected particles	Protons ($\theta_{\mathrm{lab}} = 27°$)	α-particles ($\theta_{\mathrm{lab}} = 15°$)
Measured moments	$t_{11}, t_{20}, t_{21}, t_{22}$	Vector t_{11}

- $^3\mathrm{He}(d,p)^4\mathrm{He}$: all four polarization moments of deuterons
- $^4\mathrm{He}(d,d)^4\mathrm{He}$: fast check of vector polarization of deuterons
- For protons: $^3\mathrm{He}(p,p)^3\mathrm{He}$ (elastic scattering) for vector polarization P

Analyzing reactions with different angles

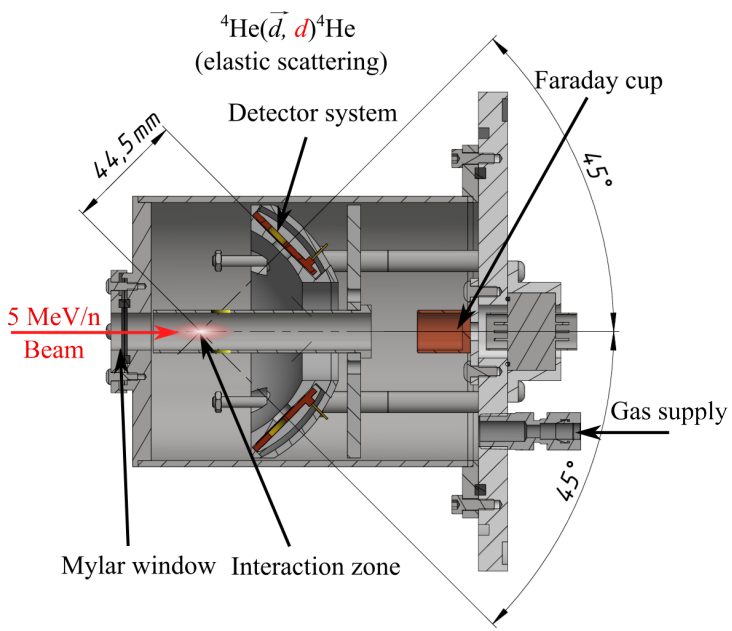

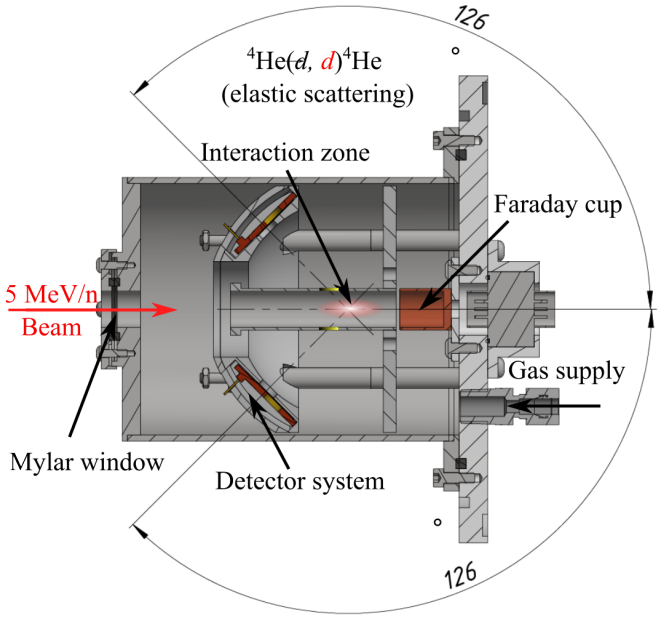

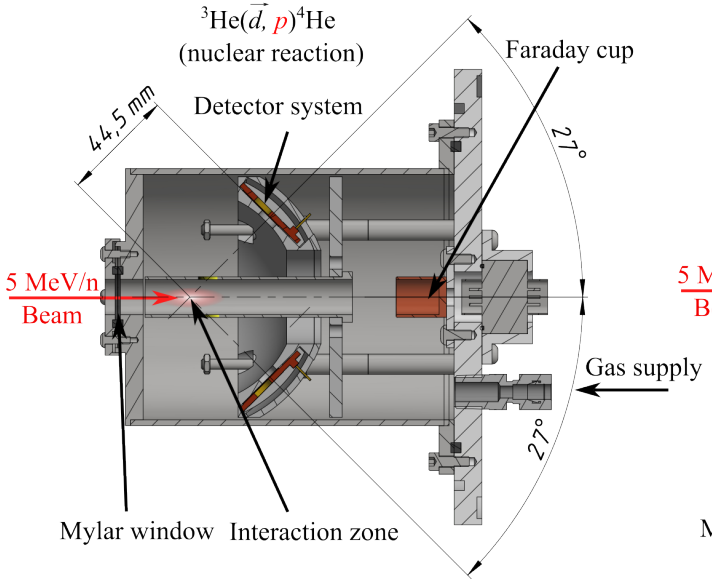

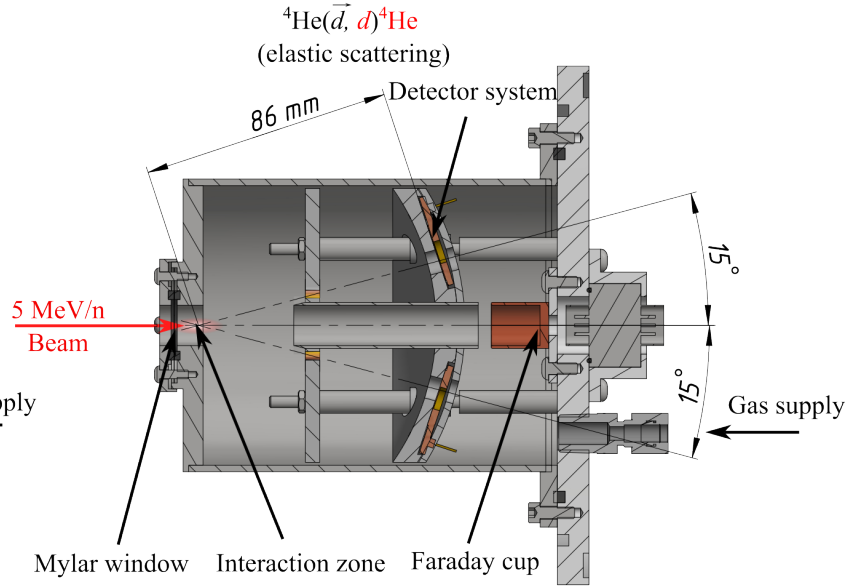

Beam parameters (deuterons / protons)

- **Accelerator:** LU-20
- **Particles:** Deuterons, Protons
- **Energy:**
  - Deuterons: up to 10 MeV (5 MeV/nucleon)
  - Protons: up to 5 MeV (5 MeV/nucleon)
- **Pulsed beam:**
  - Bunch duration: **30 μs**
  - Repetition period: **5 s**
  - Peak current: **200 μA**
  - Duty factor: 6×10^{-6}
- Average current: ~ 1.2 nA



RFQ Lu-20

Target design

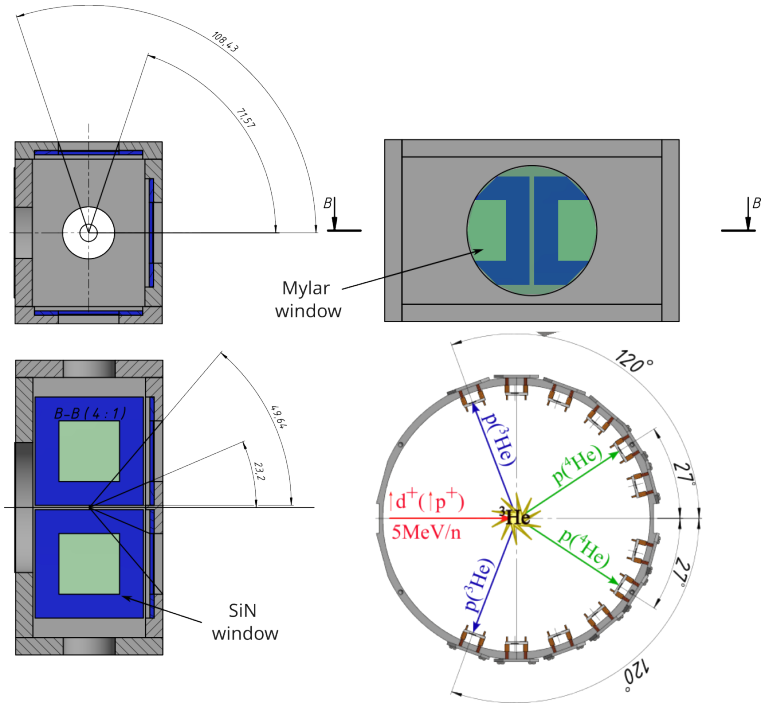

Small rectangular cell

- Entrance: Mylar 150 μm
- Exit: SiN 1 μm (two windows)
- Size: 34 mm × 17 mm × 17 mm
- For ^{3}He and ^{4}He
- Saves expensive ^{3}He

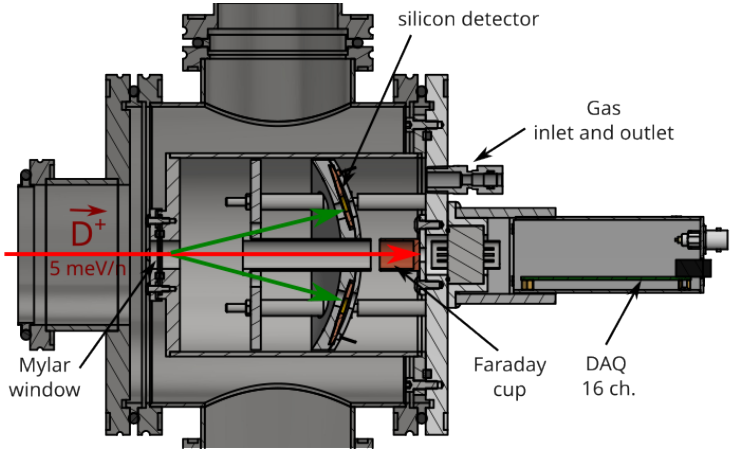

Large cylindrical cell

- Entrance: Mylar 150 μm only
- **No exit windows**
- Detectors inside the gas volume
- Diameter: 97 mm, length: 123 mm
- Maximum solid angle, no losses

Detector system

- **Type:** PIN-diodes (silicon, surface-barrier)
- **Sizes:** 10×3 mm² or 9 mm diameter
- **Solid angle:** 3.7 msr (at 90 mm distance)
- **Detection angles:**
  - For $^3\mathrm{He}(d,p)^4\mathrm{He}$: $\theta_{\mathrm{lab}} = 27°$
  - For $^4\mathrm{He}(d,d)^4\mathrm{He}$: $\theta_{\mathrm{lab}} = 15°$
- **Detected particles:**
  - Protons: 22–26 MeV
  - α-particles: 10–12 MeV (for ^{3}He) and 4 MeV (for ^{4}He)

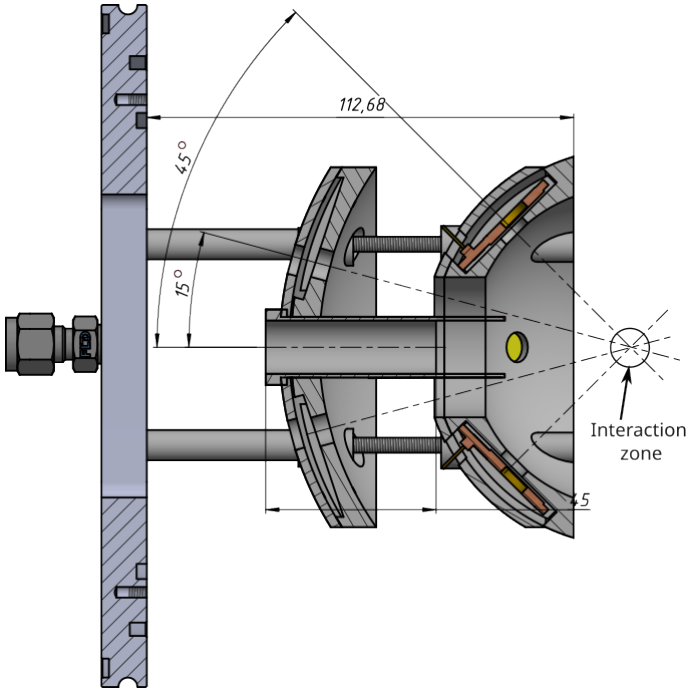

Detector arrangement

Calibration with Am-241 source

- **Configuration:** 4 PIN-detectors in vacuum
  - Angle to the axis: $\theta = 15^\circ$
  - Azimuths: $\phi = 0^\circ, 90^\circ, 180^\circ, 270^\circ$
- **Source:** $^{241}\mathrm{Am}$
- **Main alpha lines:**
  - 5.485 MeV (84.8%)
  - 5.443 MeV (13.1%)
  - 5.388 MeV (1.66%)
- **Purpose:**
  - Detector functionality check
  - Energy calibration (ADC $\rightarrow$ MeV)
  - Energy resolution (FWHM) determination

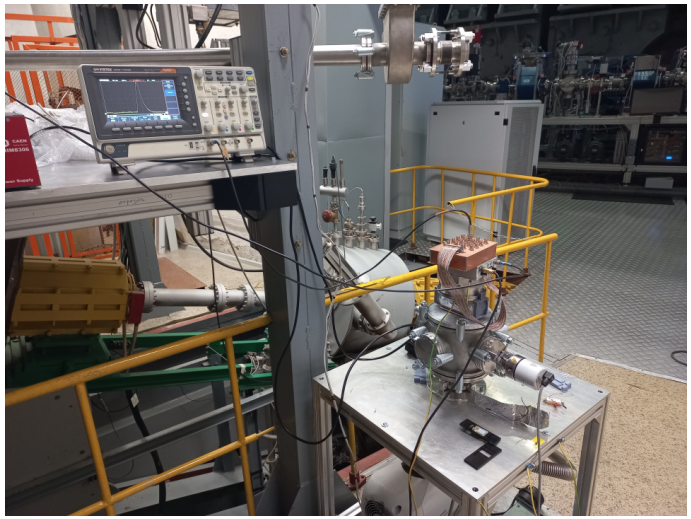

Calibration setup

Alpha spectra from Am-241

- Three main alpha lines clearly visible on the 3rd detector:
  - 5.485 MeV (84.8%)
  - 5.443 MeV (13.1%)
  - 5.388 MeV (1.66%)
- Spectra obtained with four PIN-detectors
- Excellent energy resolution (especially channel 4 (3rd detector): ∼28 keV)
- Full detector system functionality confirmed

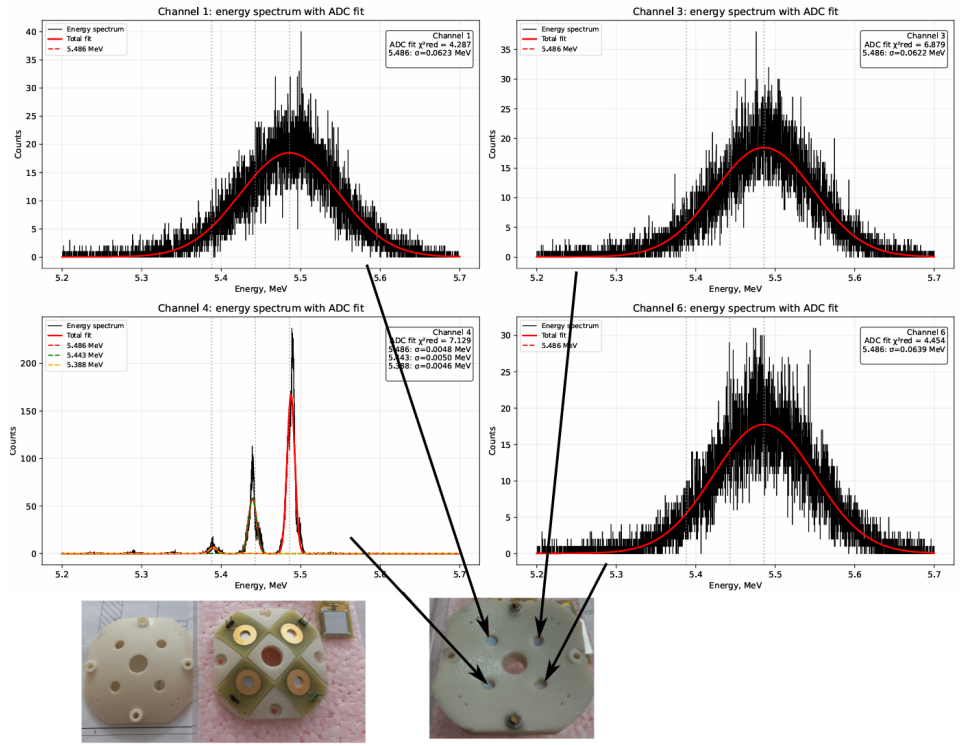

Primary data analyze. Alpha spectra from four detectors

Electronics and synchronization

- **Charge-sensitive preamplifiers:** A1422 (CAEN)
- **Digitizer:** CAEN DT5730 (14-bit, 500 MS/s, LIST/PHA modes)
- **Synchronization:** optical fiber, external trigger from RF
- **Beam current measurement:** Faraday cup with electron suppression

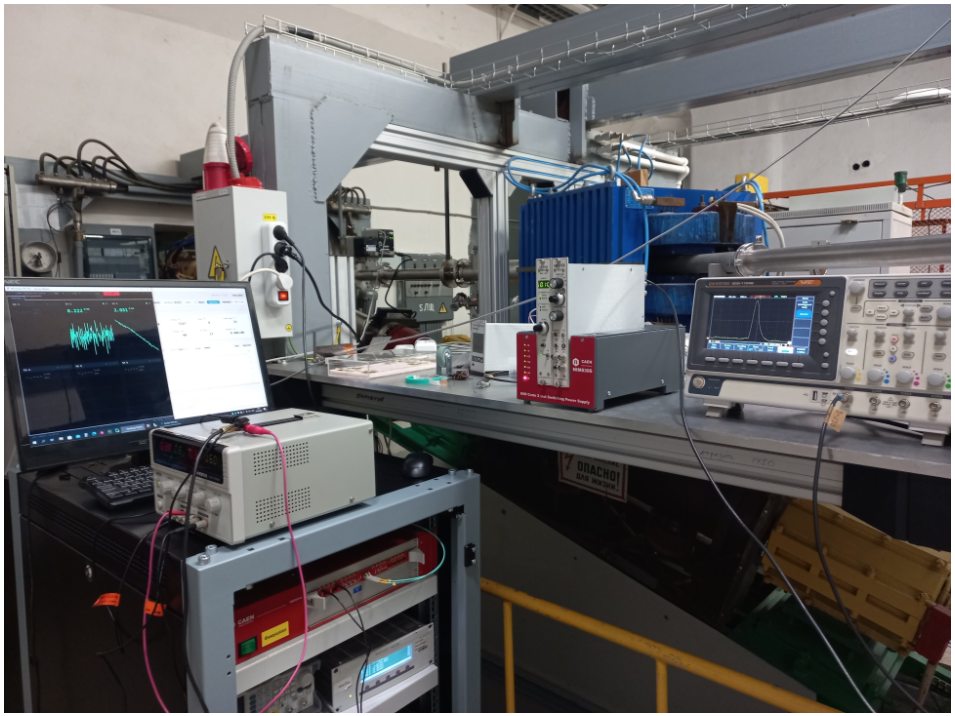

Polarization moment measurement

- **Intensity in left and right detectors:**

$$N_{L,R} = K_{L,R}\sigma_0 B\left[1 \pm 2iT_{11}t_{11} + T_{20}t_{20} \pm 2T_{21}t_{21} + 2T_{22}t_{22}\right]$$

- **Vector moment:** it_{11}
- **Tensor moments:** t_{20}, t_{21}, t_{22}
- **System of equations:**

$$[\beta] = [T_{\mathrm{pol}}][t], \quad [t] = [T_{\mathrm{pol}}]^{-1}[\beta]$$

Count rate and accuracy

Count rate (at 1 bar, 200 μA)

Parameter	$^3\mathrm{He}(d,p)^4\mathrm{He}$	$^4\mathrm{He}(d,d)^4\mathrm{He}$
Peak rate	**∼90 MHz**	**∼50 MHz**
Average rate	∼540 Hz	∼300 Hz
Events per bunch	∼2700	∼1500

- Reducing pressure to **0.1–0.2 bar** lowers the peak rate to ∼10 MHz
- Prevents pile-up and dead-time issues

Accuracy

Parameter	**Deuterons**	**Protons**
5–10 MeV	2%	–
A_{90}	–	±0.005
Time for 1% statistics	1 min	1 min

- High statistics due to intense beam
- Systematic errors from calibration, normalization, background subtraction

Polarimeter calibration

- **Absolute:**
  - T_{20}, T_{22}: $^{16}\mathrm{O}(d, \alpha_1)^{14}\mathrm{N}$
  - iT_{11}, T_{21}: $^{16}\mathrm{O}(d, \alpha_3)^{14}\mathrm{N}$
- **Relative:** beryllium degrading foils
- **Calibration energies:** 5.8, 7.4, 9.2 MeV

Example: vector polarization measurement on $^4\mathrm{He}$

- **Reaction:** $^4\mathrm{He}(d,d)^4\mathrm{He}$, $\theta_{\mathrm{lab}} = 15^\circ$
- **Measured parameter:** t_{11} (vector polarization)
- **Procedure:**
  1. Switch polarization sign (+Y / Y)
  2. Record counts in left and right detectors
  3. Calculate asymmetry ε
  4. Compute t_{11} via r:

$$\varepsilon = \frac{(C_L^+/C_R^+) - (C_L^-/C_R^-)}{(C_L^+/C_R^+) + (C_L^-/C_R^-)}, \quad r = \left(\frac{C_L^+ C_R^-}{C_L^- C_R^+}\right)^{1/2}, \quad t_{11} = \frac{1}{2iT_{11}} \cdot \frac{r-1}{r+1}$$

Beam cleaning from H_2^+

- **Problem:** H_2^+ have the same q/m as D^+
- **Solution:** stripping foil (C, 5–10 μm, aperture 3–5 mm)
- **Principle:**
  - H_2^+ dissociates in the foil
  - Protons scatter at $\sim 1^\circ$–2°, hit the aperture walls
  - D^+ pass with small losses ($\sim$0.2 MeV)
- Standard Leybold method

Safety systems

- **Vacuum system and protection:**
  - Two-stage pumping:
    - Spiral roughing pump (30 m^3/h)
    - Agilent turbomolecular pump (ISO 63, 62 l/s, 5×10^{-7} Pa)
  - **Electric gate valve:**
    - Closing time < 50 ms (TTL-controlled)
    - Automatic closure on vacuum loss
    - Interlock: valve closes if pumps fail or target pressure is exceeded
  - **Target rupture protection:**
    - In case of window rupture (Mylar / SiN), the valve isolates the beamline
    - Prevents gas from entering the detector chamber and accelerator
  - **Automatic pump shutdown:**
    - If target pressure exceeds > 3 bar or vacuum in the chamber is lost, pumps are switched off
- **Magnet cooling:**
  - Water-cooled dipole magnet
  - **Monitoring:** coil temperature, water inlet/outlet temperature, water flow rate
  - **Automatic shut-off if:**
    - $T_{\text{coils}} > 50^\circ$C
    - $T_{\text{water out}} > 35^\circ$C
    - Flow < 1 l/min





Conclusion

- Universal polarimeter for deuteron (4–12 MeV) and proton (up to 5 MeV) beams
- Two analyzing reactions for deuterons:
  - $^3\mathrm{He}(d,p)^4\mathrm{He}$: all four polarization moments
  - $^4\mathrm{He}(d,d)^4\mathrm{He}$: fast check of vector polarization
- For protons: $^3\mathrm{He}(p,p)^3\mathrm{He}$ — vector polarization
- Two target configurations: small (Mylar + SiN) and large (Mylar only, detectors inside)
- Adapted to the pulsed linac regime (30 μs, 5 s, 200 μA)
- Detector calibration with Am-241 confirms performance and energy resolution
- Accuracy: 2–4% (deuterons), ± 0.005 (protons)

Future plans

- **Testing at LU-20:**
  - Calibration measurements under real accelerator conditions
  - Developing switching protocols between modes (deuterons / protons, ^{3}He / ^{4}He)
- **Flexible detector system:**
  - Enabling installation of detectors at various angles to optimize counting rate and analyzing power
  - Adaptation of the geometry for different experimental tasks
- **Fabrication of the small SiN-window target:**
  - Assembly and testing of the compact rectangular cell with thin exit windows
  - Minimization of energy losses and background for work with expensive ^{3}He

Acknowledgments

- Colleagues from LHEP JINR
- Technical support of the LU-20 accelerator complex
- Inspiration from classical works: Cadmus & Haeberli (1975), Stephenson & Haeberli (1980), L. G. KELLER & Haeberli (1970)
- Support from the NICA program
- The study was supported by a grant from the Russian Science Foundation: No 25-72-30005, https://rscf.ru/project/25-72-30005/.

Thank you

for your attention

Questions?