Time measurement and synchronization

Konstantin Gritsay on behalf of the DAQ team

19.11.2026

Command set

- Synchronous commands:
  - *Set Next Frame* (SNF): loads the next frame number and frame tag into FEE;
  - *Start of Frame* (SOF);
  - *Start of Slice* (SOS).
- Asynchronous commands:
  - *Disable*, *Enable*: are processed by the L1 concentrator and control the *Disable* line;
  - *Disarm*, *Arm*: are processed by the L1 concentrator and control the *Reset* line;
  - *Fast Reset*;
  - other commands specific for various FEE modules.
- Synchronous commands must be atomic with respect to asynchronous commands.

FEE control lines

- LVDS lines from L1 to FEE (incomplete list):
  - *Global clock*, 125 MHz;
  - *Set Next Frame*;
  - *Start of frame*;
  - *Start of slice*.
- unipolar lines from L1 to FEE:
  - *Disable* line — highest priority: activates the hardware reset of FEE module;
  - *Reset* line: activates the software reset of FEE module.
- The processing of synchronous commands in the FEE must be disabled if there is an active level on any of the *Disable* and *Reset* lines.

Resets

- Four reset types are supported: Hardware reset, Software reset, Fast reset and Synchronous reset.
- Hardware reset — used during maintenance. Not used during operation. The most complete reset, can reboot the FPGA. It must bring the FEE module to a known state, ready for processing asynchronous commands.
- Software reset — used diring starting the run. It must bring the FEE module to a known state, ready for processing asynchronous commands.
- Fast reset — used during operation. Can be used to clear counters, buffers, etc. The parameters that determine the operation of the FEE must be preserved during a Fast reset. A Fast reset is performed in two situations: before the start of a frame batch by a special asynchronous command *Fast Reset* and on the first clock signal immediately after the end of a frame batch.

The time structure of the run

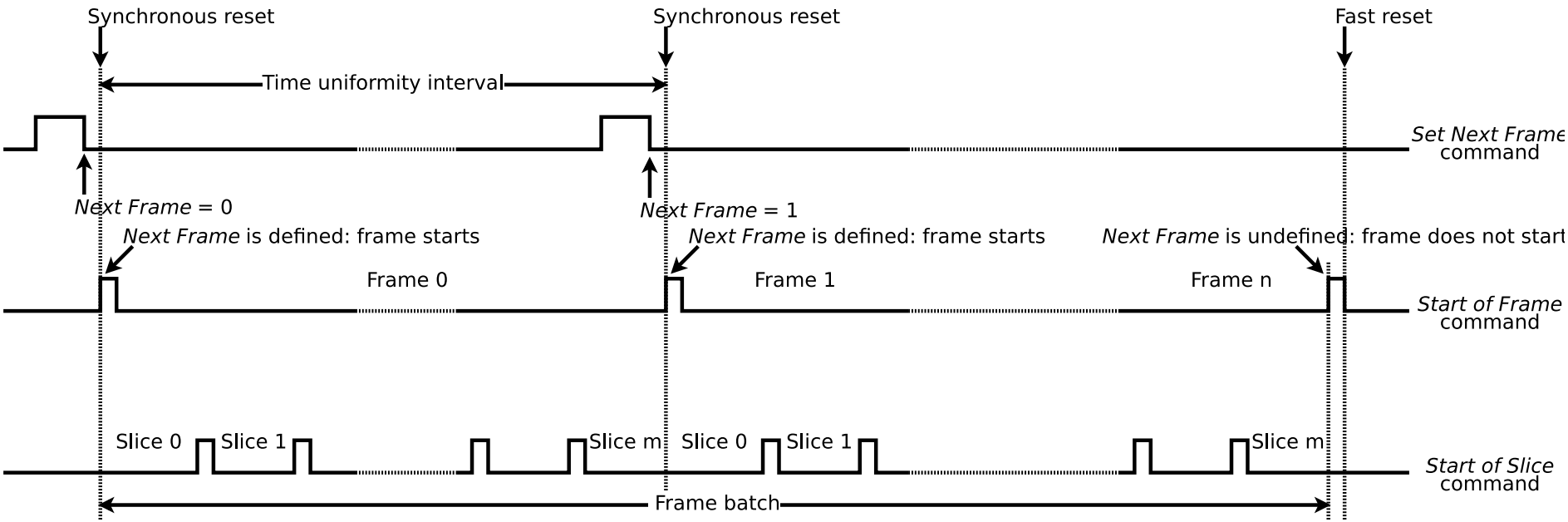

- Slice — around 10 μs.
- Frame — 0.1-10 s.
- A frame batch is a sequence of frames without any gaps between them. It can be of any length, from 1 frame to an entire run.

The time structure of the run

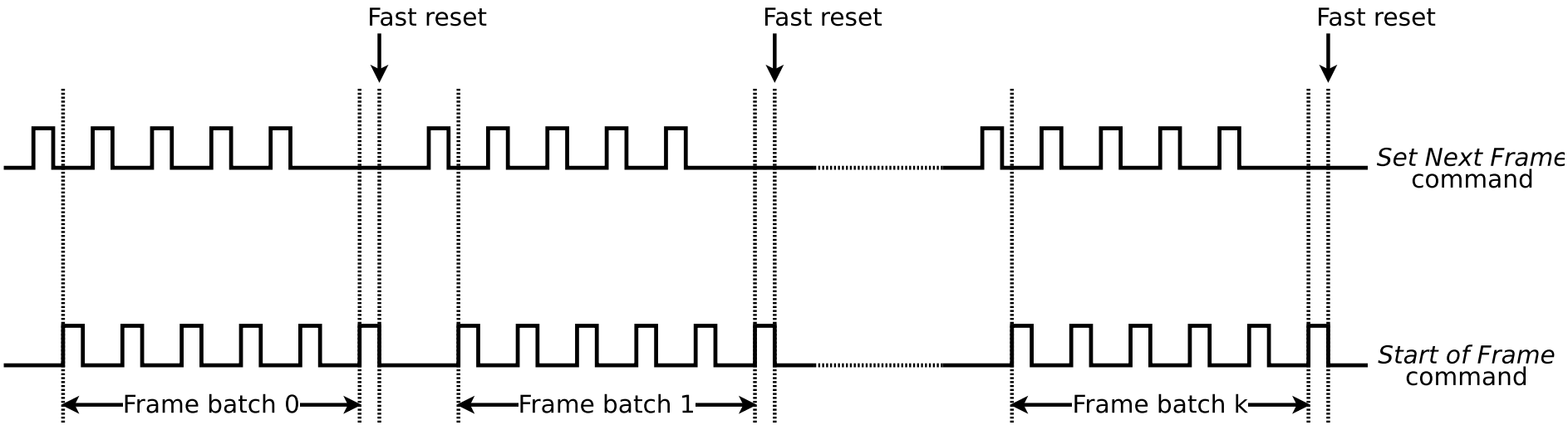

- A run consists of a sequence of frame batches.
- There is a time interval between frame batches that is necessary for a Fast reset.
- The run can last up to several hours.

The start of the frame batch sequence (the start of the run).

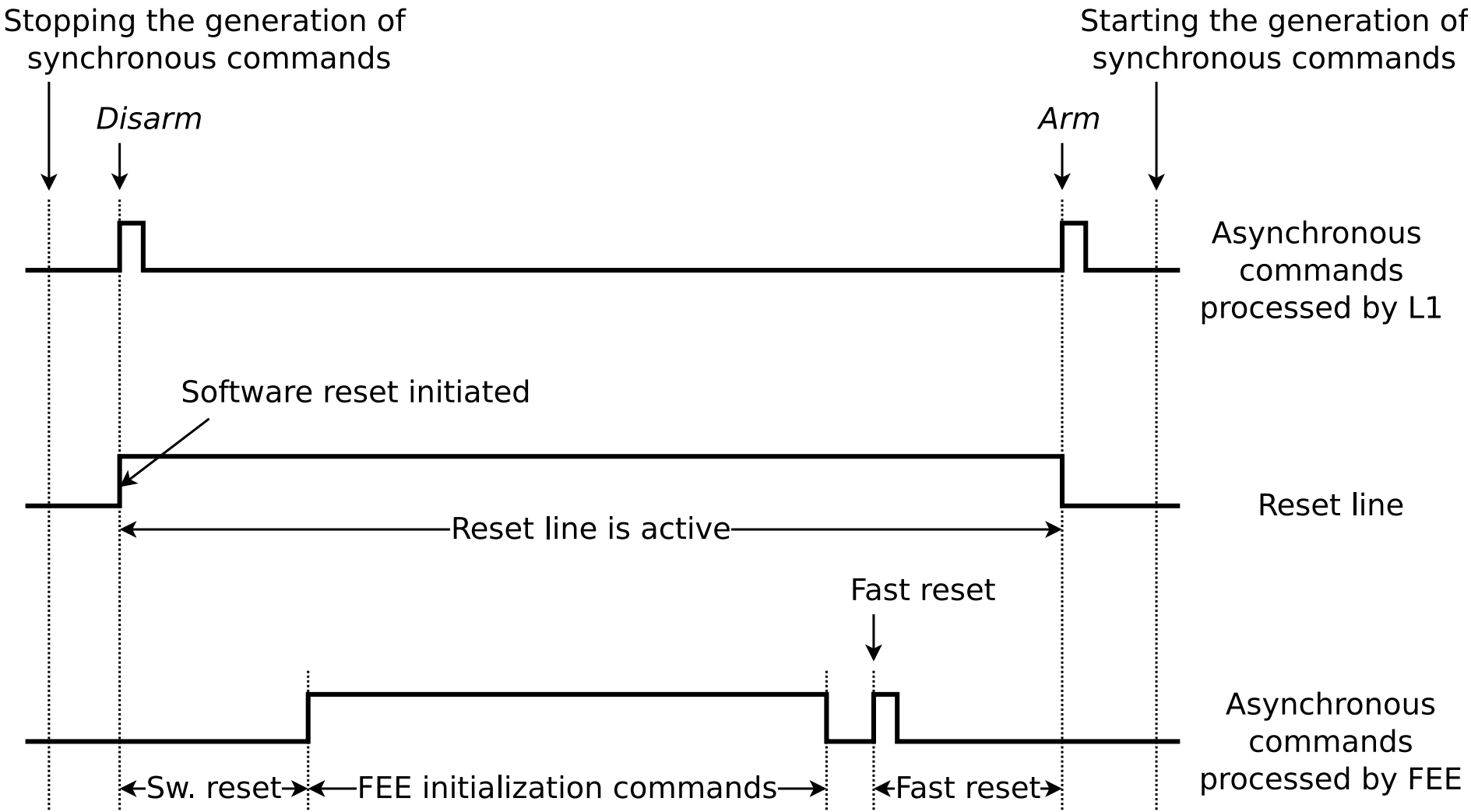

The reset FEE module diring the run.

- The necessity of such a procedure must be determined by the FEE developers.
- To implement this procedure, no additional entities need to be added to the FEE beyond those that were already used when starting the run.

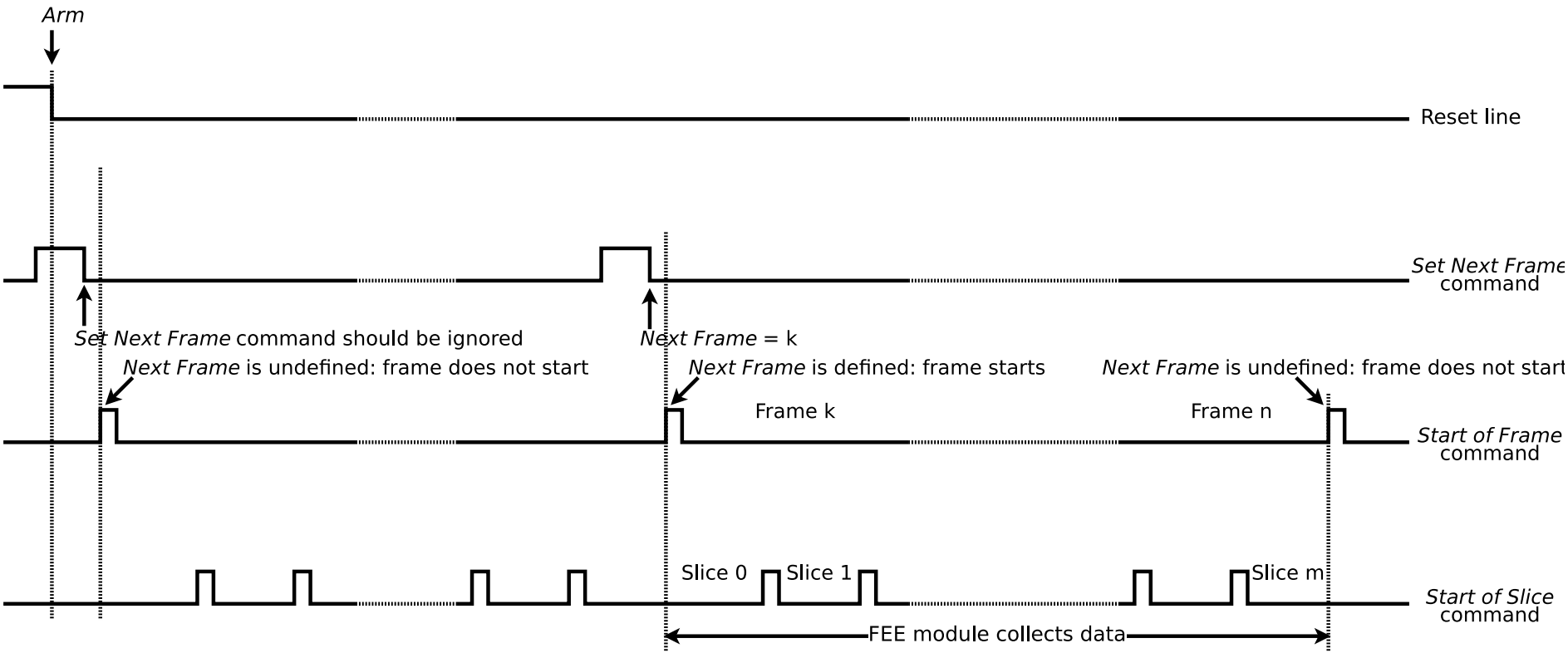

Time measurement

- Each hit must have a timestamp.
- The FEE developer determines how to measure time based on the requirements of a specific detector and the components used in FEE.
- The following general requirements must be met:
  - **The time measurement technology must ensure the calculation of the hit time relative to the start of the frame during data processing.**
  - **Inside of the frame, the time measurement technology must ensure the continuity and uniformity of timekeeping.**
  - **Inside of the frame, the time measurement technology should not affect the probability of registering a hit.**
  - **The time measurement technology must ensure that FEE assigns the correct slice number to the hit.**
- No correlation is assumed between the time in two different frames.
- The specific form in which time information is stored in the data depends on the FEE.

Time measurement

- Let's assume that FEE measures time by counting clock signals. Let's call this clock the internal clock.
- One way to measure time is to determine the start of the slice using internal clocks: the slice time can be stored in the data as an virtual "hit", leaving the calculation of the real hit time relative to the start of the slice until the data is processed, or performing these calculations within the FEE.
- Assuming what both global and internal clocks "good enough" this method does not require correlation between global and internal clocks.
- The parameters of internal clock signals may be better than the parameters of global clock signals (TOF).

Time measurement

- Another method to measure time is based on the so-called Synchronous reset: the time counter is reset at the beginning of a frame or a slice in sync with the clock signal.
- To ensure that the reset is synchronized with both the global and internal clocks simultaneously, the internal clock must be synchronized with the global clock, and its frequency must be a multiple of the frequency of the global clock.
- It should be noted that on some devices, such a reset may cause a disruption in time counting: several clock signals may be lost, and as a result, the '0' time may be shifted by several clock cycles relative to the actual start of the frame or slice. Another common problem is that some hits may be missed as a result of the reset procedure. While a deviation from the true value of '0' time by a fixed value or skipping hits near the '0' time is acceptable at the beginning of the frame, this is unacceptable inside the frame.

Time measurement

- Synchronous reset at the start of the frame seems preferable, but it can also pose implementation challenges: the frame length may be very long and require a counter with a large bit width.
- A possible solution to this problem could be to use counter rollover: when the counter reaches its maximum value, it resets to 0 on the next clock signal.
- Provided that the slice number for the hit is known and the counter period is equal to or greater than the slice length, it is possible to calculate the hit time relative to the start of the frame by knowing the value of the counter corresponding to the hit, even without knowing the number of rollovers.